ITEM NO.	PART NUMBER	DESCRIPTION	QTY.
1	MONO_038-P301	HEADPHONE REST FRONT	1
2	MONO_038-P304	RUBBER REST	2
3	MONO_038-A302	HEADPHONE REST REAR ASSEMBLY	1
4	MONO_038-A306	BASE + WOODEN TOP ASSEMBLY	1
5	M4 BUTTON HEAD SCREW X 12mm	M4 X 12mm BUTTON HEAD SCREW	2

ASSEMBLY PROCESS:

1. ALIGN THE THROUGH HOLES IN THE HEADPHONE REST FRONT AND BACK WITH THE HOLES IN THE UPPER END OF THE ACRYLIC DIFFUSER. SECURE USING 2 X SCREWS INTO THE CLINCH NUTS ON THE HEADPHONE REST REAR ASSEMBLY. IF REGULAR NUTS ARE BEING USED INSTEAD, THEY WILL NEED TO BE HELD IN PLACE WHILE ALSO HOLDING THE PARTS OF THE REST IN PLACE. SECURE TIGHTLY.
2. PEEL OFF THE PROTECTIVE BACKING FROM 2 X RUBBER RESTS AND ADHERE TO THE UPPER HORIZONTAL FACES OF THE HEADPHONE REST FRONT AND BACK.
3. ASSEMBLY IS COMPLETE.

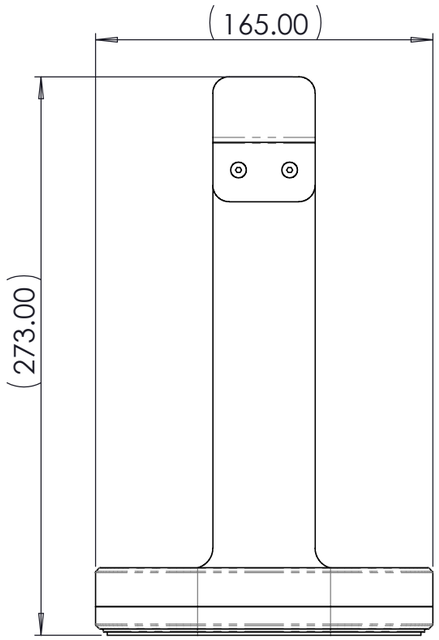

FRONT VIEW

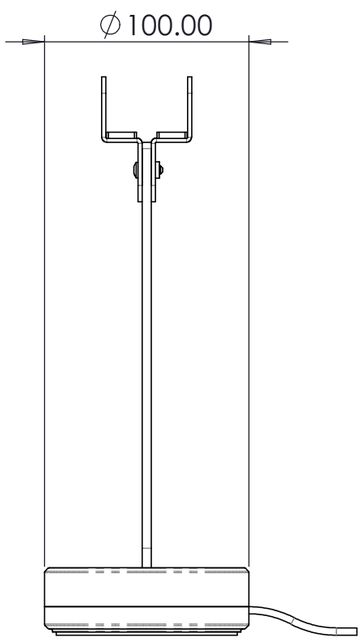

RIGHT VIEW

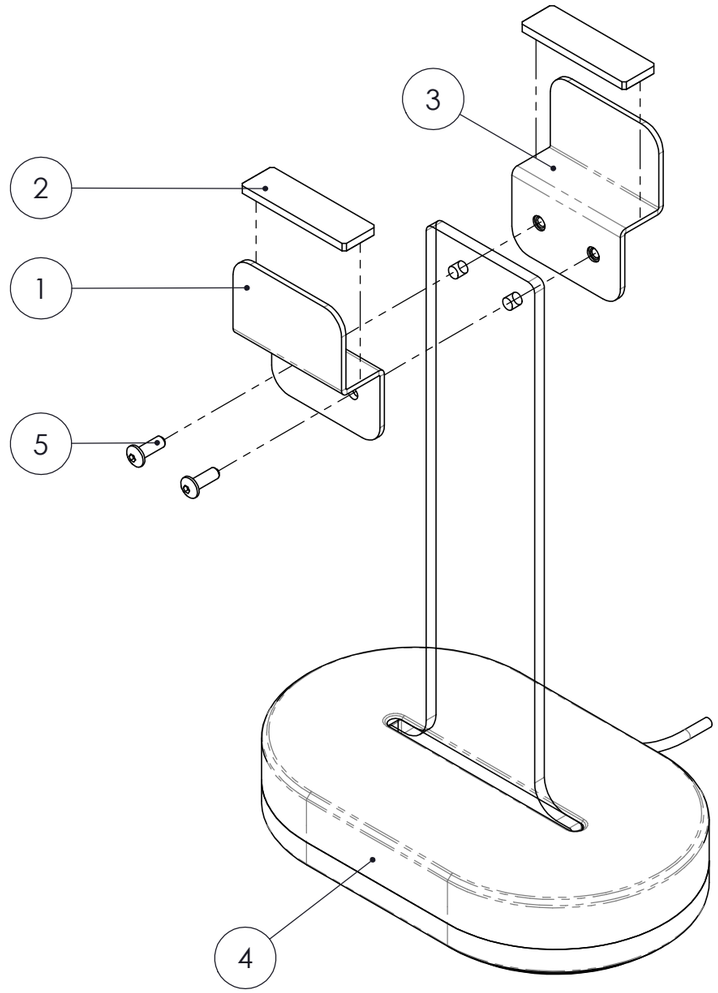

EXPLODED VIEW

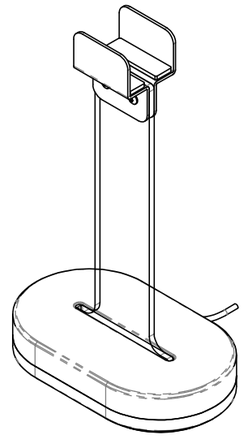

PERSPECTIVE VIEW 1

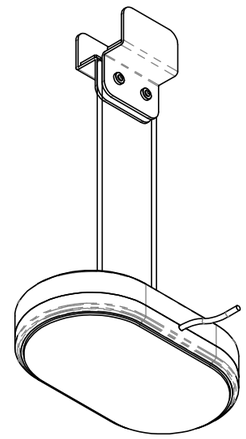

PERSPECTIVE VIEW 2

TOLERANCES

- Unless otherwise specified (UOS), all dimensions on this assembly drawing are for reference only. The final assembly condition is the result of the accumulated tolerances (stack-up) of the individual manufactured components.
- All components shall be manufactured to the dimensions and tolerances specified on their respective detail drawings.
- Critical interface or functional dimensions on the assembly are identified with a specific tolerance. These dimensions shall be achieved through component tolerancing, assembly processes, or adjustment.
- Mating parts to be free of interference, binding, or misalignment UOS.

DIMENSIONS

- All dimensions are in millimetres unless otherwise indicated.
- Critical inspection dimension:
- Dimensions with ** may require adjustment during tool trials.
- First article inspection number: (supplier to provide a report detailing accuracy to each of these dimensions).
- Other dimensions for reference.

GENERAL NOTES

- This drawing to be read in conjunction with all detail drawings and specifications referenced in the Bill of Materials (BOM).
- Fabricate or procure all components as per the BOM.
- Assembly shall be kept clean and free of all dirt, debris, metal chips, and foreign contaminants throughout the build process.
- Refer to individual component drawings for all finishing requirements.
- Remove all burrs and break all sharp edges on components prior to assembly.
- Final assembly shall be free of loose hardware, debris, and foreign objects.
- Final assembly to be free of scratches, tool marks, stains, and other cosmetic defects.
- Workmanship should be consistent with best industry practices.

ASSEMBLY NOTES

- Tighten all threaded fasteners to standard torque values for their size and grade, UOS.
- All moving parts shall operate smoothly and freely through their entire range of motion, without binding.
- All components shall assemble without use of excessive force.

SURFACE TEXTURE KEY

Refer to individual part drawings

--	--	--
--	--	--
--	--	--

#	DESCRIPTION	DATE
--	--	--
--	--	--
--	--	--
--	--	--
--	--	--
--	--	--
--	--	--
--	--	--
--	--	--
--	--	--
--	--	--
--	--	--
02	Rev up to match sub-part	17/03/2026
01	Initial Release	19/09/2025

DESIGN INTENT

UOS fabricate per individual part drawings. The 3D model represents the final formed condition for reference.

© COPYRIGHT

This drawing is supplied in confidence. Do not disclose to any third party without prior written consent from Manufacturing Skills Queensland

MANUFACTURING SKILLS QUEENSLAND

monochrome
www.monochrome-design.com

PROJECT NAME	Headphone Stand	COLOUR: Refer to Part Drawings	PART NAME: MONO_038-a300
DRAWING TYPE	Part Drawing	FINISH: Refer to Part Drawings	
DATE CREATED	Friday, 19 September 2025	MATERIAL: Refer to Part Drawings	DESCRIPTION: Headphone Stand Assembly

NOTES:

A3

SHEET 1 OF 1

DO NOT SCALE DRAWING

SCALE:1:3

ITEM NO.	PART NUMBER	DESCRIPTION	QTY.
1	MONO_038-P303	HEADPHONE REST BACK	1
2	M4X-2	M4 X -2 SELF CLINCH NUT	2

ASSEMBLY PROCESS:

1. INSTALL 2 X SELF CLINCHING NUTS INTO THE HEADPHONE REST BACK VIA A SPECIALISED TOOL OR SUITABLE METHOD OF COMPRESSION.
2. ALTERNATIVELY, REGULAR M4 NUTS MAY BE USED IN PLACE OF THE SELF-CLINCHING NUTS, BUT THESE WILL BE INSTALLED IN THE FOLLOWING ASSEMBLY STAGES. NOTE THAT IF USING REGULAR NUTS, THE HOLES IN P303 WILL NEED TO BE REDUCED TO 4.5mm. IN THAT INSTANCE, MONO_038-P301 HEADPHONE REST FRONT MAY BE USED FOR BOTH THE FRONT AND BACK OF THE HEADPHONE REST.

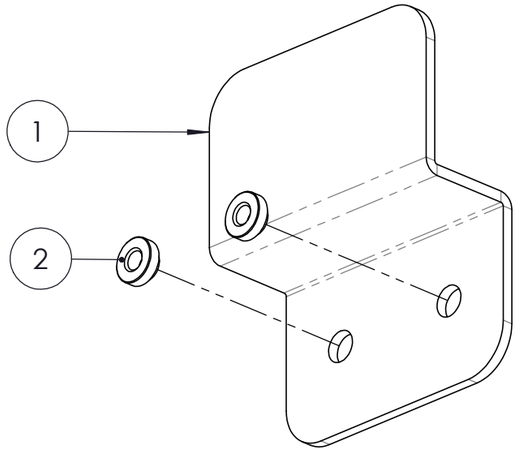

EXPLODED VIEW

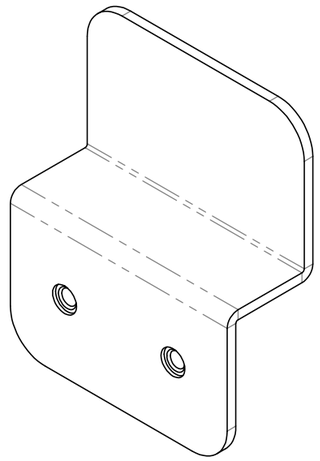

PERSPECTIVE VIEW 1

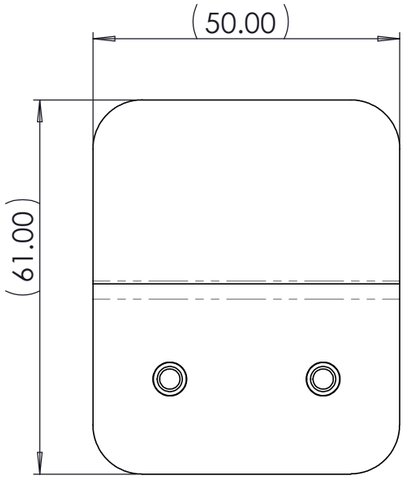

FRONT VIEW

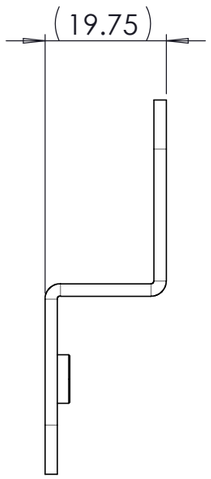

RIGHT VIEW

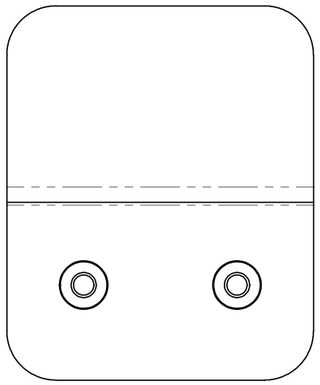

BACK VIEW

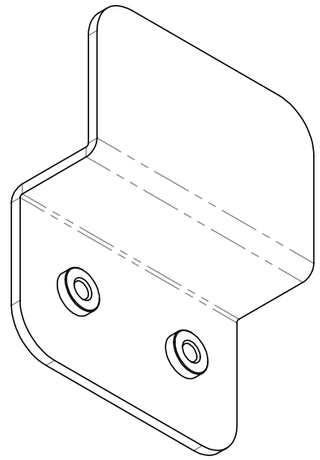

PERSPECTIVE VIEW 2

TOLERANCES

- Unless otherwise specified (UOS), all dimensions on this assembly drawing are for reference only. The final assembly condition is the result of the accumulated tolerances (stack-up) of the individual manufactured components.
- All components shall be manufactured to the dimensions and tolerances specified on their respective detail drawings.
- Critical interface or functional dimensions on the assembly are identified with a specific tolerance. These dimensions shall be achieved through component tolerancing, assembly processes, or adjustment.
- Mating parts to be free of interference, binding, or misalignment UOS.

DIMENSIONS

- All dimensions are in millimetres unless otherwise indicated.
- Critical inspection dimension: ⬭
- Dimensions with ** may require adjustment during tool trials.
- First article inspection number: ◯ (supplier to provide a report detailing accuracy to each of these dimensions).
- Other dimensions for reference.

GENERAL NOTES

- This drawing to be read in conjunction with all detail drawings and specifications referenced in the Bill of Materials (BOM).
- Fabricate or procure all components as per the BOM.
- Assembly shall be kept clean and free of all dirt, debris, metal chips, and foreign contaminants throughout the build process.
- Refer to individual component drawings for all finishing requirements.
- Remove all burrs and break all sharp edges on components prior to assembly.
- Final assembly shall be free of loose hardware, debris, and foreign objects.
- Final assembly to be free of scratches, tool marks, stains, and other cosmetic defects.
- Workmanship should be consistent with best industry practices.

ASSEMBLY NOTES

- Tighten all threaded fasteners to standard torque values for their size and grade, UOS.
- All moving parts shall operate smoothly and freely through their entire range of motion, without binding.
- All components shall assemble without use of excessive force.

SURFACE TEXTURE KEY

Refer to individual part drawings

--	--	--
--	--	--
--	--	--

#	DESCRIPTION	DATE
--	--	--
--	--	--
--	--	--
--	--	--
--	--	--
--	--	--
--	--	--
--	--	--
--	--	--
--	--	--
--	--	--
--	--	--
--	--	--
01	Initial Release	19/09/2025

DESIGN INTENT

UOS fabricate per individual part drawings. The 3D model represents the final formed condition for reference.

© COPYRIGHT

This drawing is supplied in confidence. Do not disclose to any third party without prior written consent from Manufacturing Skills Queensland

MANUFACTURING SKILLS QUEENSLAND

monochrome
www.monochrome-design.com

PROJECT NAME	Headphone Stand	COLOUR: White	PART NAME: MONO_038-a302
DRAWING TYPE	Part Drawing	FINISH: Matte	
DATE CREATED	Friday, 19 September 2025	MATERIAL: 2mm Zincanneal Sheet	DESCRIPTION: Headphone Rest Rear Assembly

NOTES:

- Spray Paint or powdercoat, per available equipment, training and services.
- Mask all threads when painting/ powdercoating.
- Colour may be customised to suit student's preference.

A3

SHEET 1 OF 1

DO NOT SCALE DRAWING

SCALE:1:1

ITEM NO.	PART NUMBER	DESCRIPTION	QTY.
1	MONO_038-A307	WOODEN TOP ASSEMBLY	1
2	MONO_038-A310	BASE + DIFFUSER ASSEMBLY	1
3	MONO_038-P309	RUBBER BASE	1
4	M4 SOCKET CAP SCREW X 20mm	M4 X 20mm BUTTON HEAD SCREW	4

ASSEMBLY PROCESS:

1. PLACE THE WOODEN TOP ASSEMBLY OVER THE ACRYLIC DIFFUSER AND DROP IT DOWN UNTIL IT RESTS ON THE BASE.
2. INVERT THE ASSEMBLY AND SECURE THE WOODEN TOP IN PLACE WITH 4 X SCREWS.
3. REMOVE THE PROTECTIVE BACKING FROM THE RUBBER BASE.
4. ALIGN THE RUBBER BASE PROFILE WITH THE RECESS ON THE UNDERSIDE OF THE BASE, THEN PRESS DOWN TO SECURE IT IN PLACE. NOTE THAT AFTER THIS POINT, IT IS NOT POSSIBLE TO ACCESS THE INTERIOR OF THE ENCLOSURE WITHOUT PEELING OFF AND POTENTIALLY DESTROYING THE RUBBER BASE. ENSURE THAT ALL TESTING OF ELECTRONIC FUNCTIONALITY IS COMPLETED PRIOR TO FITTING THE RUBBER BASE.

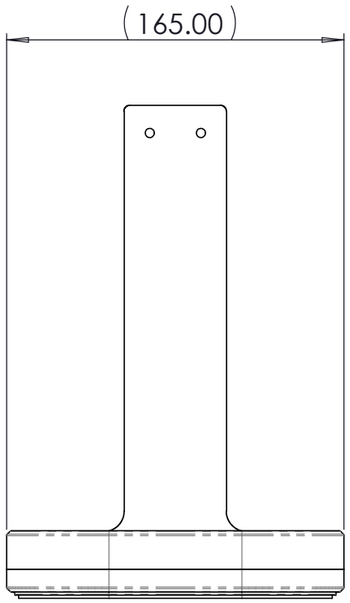

FRONT VIEW

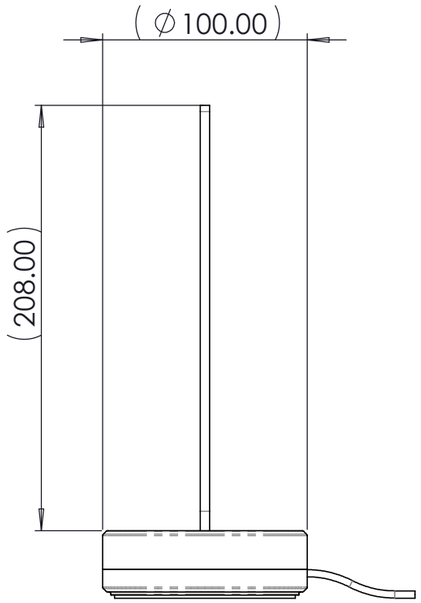

RIGHT VIEW

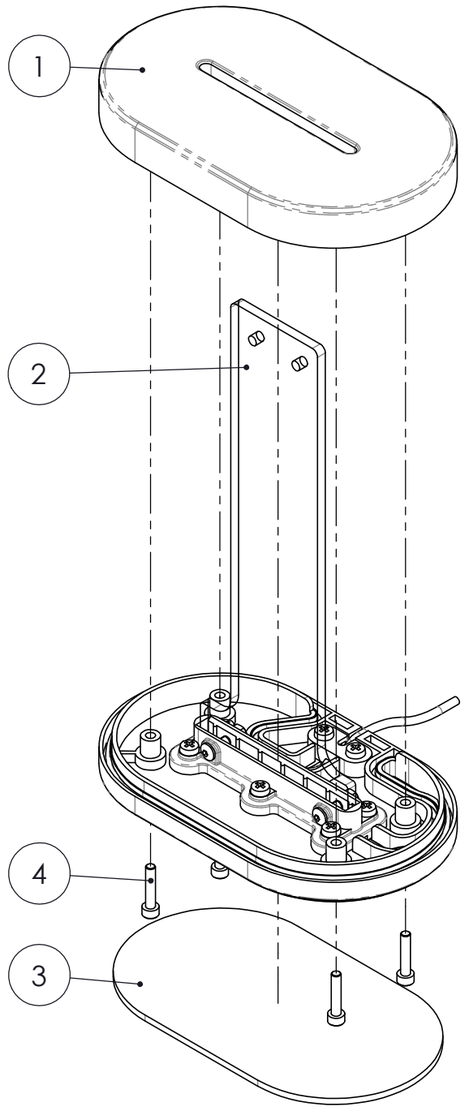

EXPLODED VIEW

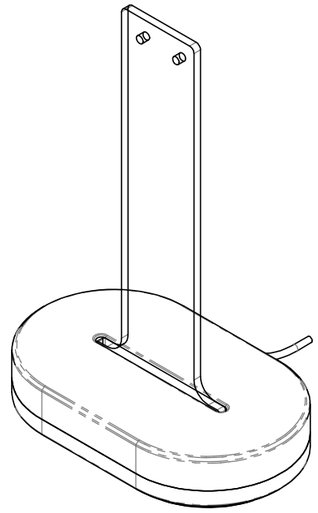

PERSPECTIVE VIEW 1

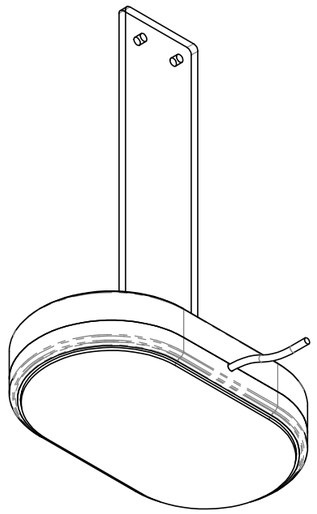

PERSPECTIVE VIEW 2

TOLERANCES

- Unless otherwise specified (UOS), all dimensions on this assembly drawing are for reference only. The final assembly condition is the result of the accumulated tolerances (stack-up) of the individual manufactured components.
- All components shall be manufactured to the dimensions and tolerances specified on their respective detail drawings.
- Critical interface or functional dimensions on the assembly are identified with a specific tolerance. These dimensions shall be achieved through component tolerancing, assembly processes, or adjustment.
- Mating parts to be free of interference, binding, or misalignment UOS.

DIMENSIONS

- All dimensions are in millimetres unless otherwise indicated.
- Critical inspection dimension:
- Dimensions with ** may require adjustment during tool trials.
- First article inspection number: (supplier to provide a report detailing accuracy to each of these dimensions).
- Other dimensions for reference.

GENERAL NOTES

- This drawing to be read in conjunction with all detail drawings and specifications referenced in the Bill of Materials (BOM).
- Fabricate or procure all components as per the BOM.
- Assembly shall be kept clean and free of all dirt, debris, metal chips, and foreign contaminants throughout the build process.
- Refer to individual component drawings for all finishing requirements.
- Remove all burrs and break all sharp edges on components prior to assembly.
- Final assembly shall be free of loose hardware, debris, and foreign objects.
- Final assembly to be free of scratches, tool marks, stains, and other cosmetic defects.
- Workmanship should be consistent with best industry practices.

ASSEMBLY NOTES

- Tighten all threaded fasteners to standard torque values for their size and grade, UOS.
- All moving parts shall operate smoothly and freely through their entire range of motion, without binding.
- All components shall assemble without use of excessive force.

SURFACE TEXTURE KEY

Refer to individual part drawings

--	--	--
--	--	--
--	--	--

#	DESCRIPTION	DATE
--	--	--
--	--	--
--	--	--
--	--	--
--	--	--
--	--	--
--	--	--
--	--	--
--	--	--
--	--	--
--	--	--
02	Rev up to match sub-part	17/03/2026
01	Initiak Release	19/09/2025

DESIGN INTENT

UOS fabricate per individual part drawings. The 3D model represents the final formed condition for reference.

© COPYRIGHT

This drawing is supplied in confidence. Do not disclose to any third party without prior written consent from Manufacturing Skills Queensland

MANUFACTURING SKILLS QUEENSLAND

monochrome
www.monochrome-design.com

PROJECT NAME	Headphone Stand	COLOUR: Refer to Part Drawings	PART NAME: MONO_038-a306
DRAWING TYPE	Part Drawing	FINISH: Refer to Part Drawings	
DATE CREATED	Friday, 19 September 2025	MATERIAL: Refer to Part Drawings	DESCRIPTION: Base + Wooden Top Assembly

NOTES:

A3

SHEET 1 OF 1

DO NOT SCALE DRAWING

SCALE:1:3

ITEM NO.	PART NUMBER	DESCRIPTION	QTY.
1	MONO_038-P308	WOODEN TOP	1
2	M4 THREADED WOOD INSERT	M4 THREADED WOOD INSERT	4

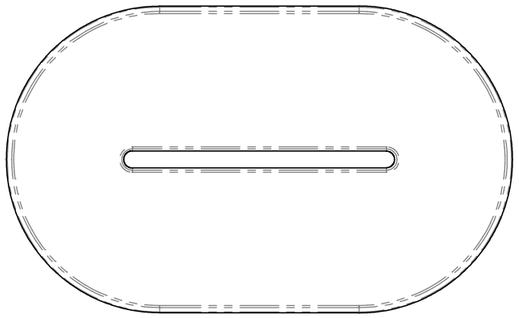

TOP VIEW

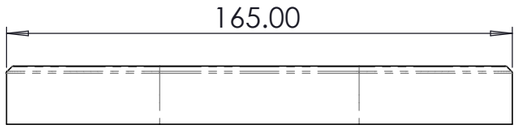

FRONT VIEW

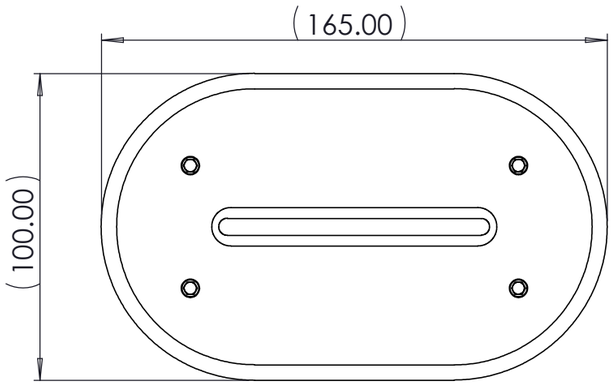

UNDERSIDE VIEW

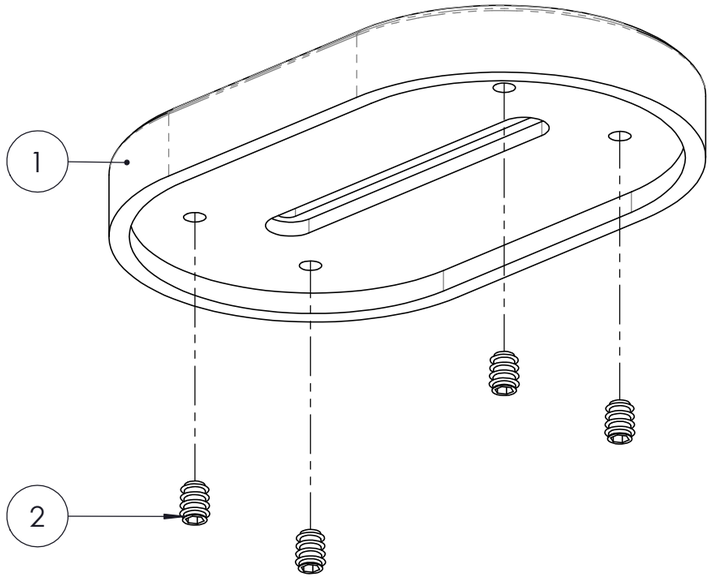

EXPLODED VIEW

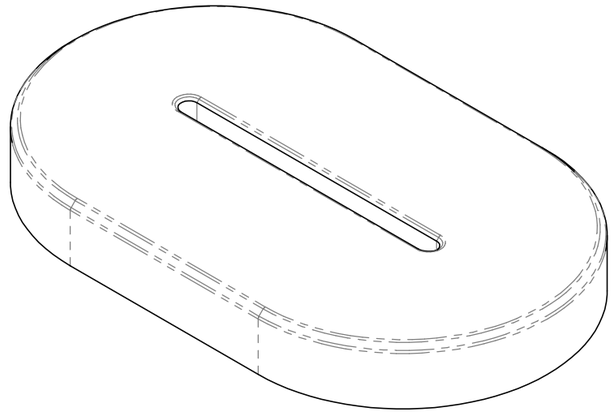

PERSPECTIVE VIEW 1

ASSEMBLY PROCESS:

1. INSTALL 4 X M4 THREADED WOOD INSERTS INTO THE PILOT HOLES OF THE WOODEN TOP.

TOLERANCES

- Unless otherwise specified (UOS), all dimensions on this assembly drawing are for reference only. The final assembly condition is the result of the accumulated tolerances (stack-up) of the individual manufactured components.
- All components shall be manufactured to the dimensions and tolerances specified on their respective detail drawings.
- Critical interface or functional dimensions on the assembly are identified with a specific tolerance. These dimensions shall be achieved through component tolerancing, assembly processes, or adjustment.
- Mating parts to be free of interference, binding, or misalignment UOS.

DIMENSIONS

- All dimensions are in millimetres unless otherwise indicated.
- Critical inspection dimension:
- Dimensions with ** may require adjustment during tool trials.
- First article inspection number: (supplier to provide a report detailing accuracy to each of these dimensions).
- Other dimensions for reference.

GENERAL NOTES

- This drawing to be read in conjunction with all detail drawings and specifications referenced in the Bill of Materials (BOM).
- Fabricate or procure all components as per the BOM.
- Assembly shall be kept clean and free of all dirt, debris, metal chips, and foreign contaminants throughout the build process.
- Refer to individual component drawings for all finishing requirements.
- Remove all burrs and break all sharp edges on components prior to assembly.
- Final assembly shall be free of loose hardware, debris, and foreign objects.
- Final assembly to be free of scratches, tool marks, stains, and other cosmetic defects.
- Workmanship should be consistent with best industry practices.

ASSEMBLY NOTES

- Tighten all threaded fasteners to standard torque values for their size and grade, UOS.
- All moving parts shall operate smoothly and freely through their entire range of motion, without binding.
- All components shall assemble without use of excessive force.

SURFACE TEXTURE KEY

Refer to individual part drawings

--	--	--
--	--	--
--	--	--

#	DESCRIPTION	DATE
--	--	--
--	--	--
--	--	--
--	--	--
--	--	--
--	--	--
--	--	--
--	--	--
--	--	--
--	--	--
--	--	--
--	--	--
01	Initial Release	19/09/2025

DESIGN INTENT

UOS fabricate per individual part drawings. The 3D model represents the final formed condition for reference.

© COPYRIGHT

This drawing is supplied in confidence. Do not disclose to any third party without prior written consent from Manufacturing Skills Queensland

MANUFACTURING SKILLS QUEENSLAND

monochrome
www.monochrome-design.com

PROJECT NAME	Headphone Stand	COLOUR: Refer to Part Drawings	PART NAME: MONO_038-a307
DRAWING TYPE	Part Drawing	FINISH: Refer to Part Drawings	
DATE CREATED	Friday, 19 September 2025	MATERIAL: Refer to Part Drawings	DESCRIPTION: Wooden Top Assembly

NOTES:

- Spray Paint or powdercoat, per available equipment, training and services.
- Mask all threads when painting/ powdercoating.
- Colour may be customised to suit student's preference.

A3

SHEET 1 OF 1

DO NOT SCALE DRAWING

SCALE:1:2

ITEM NO.	PART NUMBER	DESCRIPTION	QTY.
1	MONO_038-A311	BASE ASSEMBLY	1
2	MONO_038-A320	DIFFUSER ASSEMBLY	1
3	M4 ZINC PAN POZI (PZ2) HI-PLAS PLASTITE SCREW	M4 X 6mm PAN POZI PLASTITE SCREW	5

ASSEMBLY PROCESS:

1. PLACE THE DIFFUSER ASSEMBLY OVER THE MATCHING PROTRUSIONS ON THE BASE ASSEMBLY.

2. WHEN SEATED CORRECTLY, SECURE THE ASSEMBLY IN PLACE USING 5 X SELF-TAPPING SCREWS.

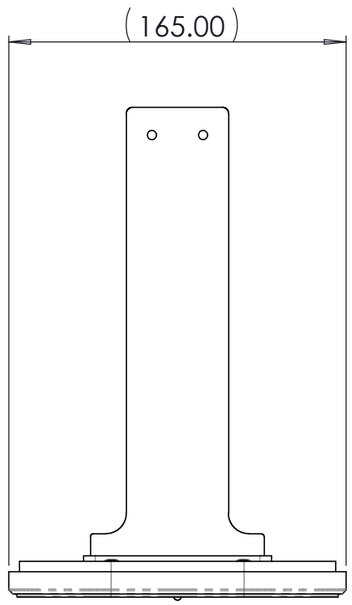

FRONT VIEW

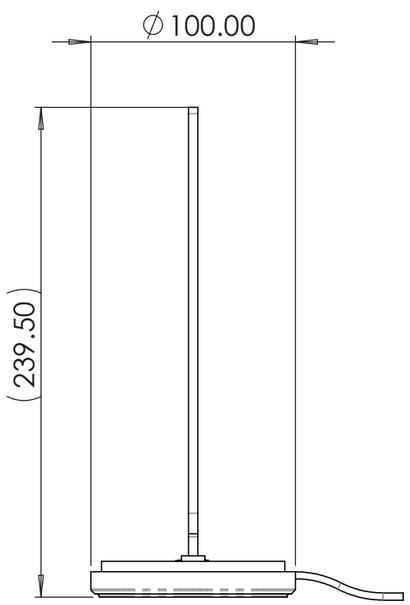

RIGHT VIEW

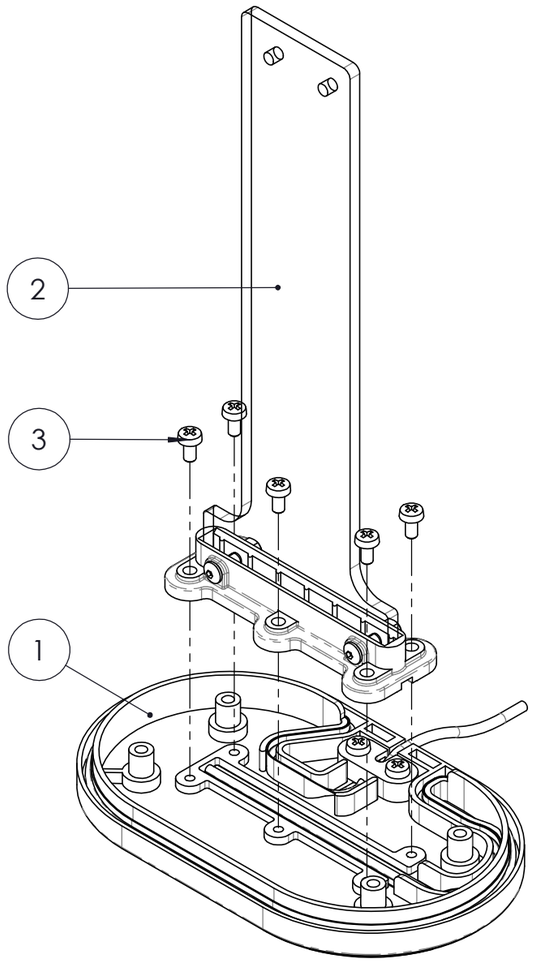

EXPLODED VIEW

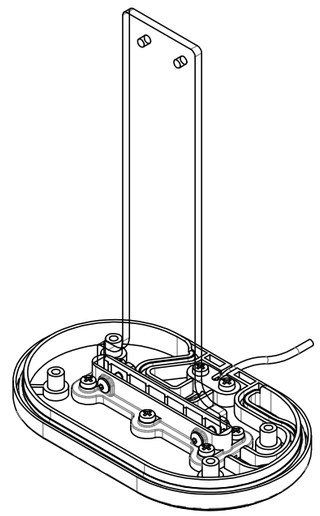

PERSPECTIVE VIEW 1

TOLERANCES

- Unless otherwise specified (UOS), all dimensions on this assembly drawing are for reference only. The final assembly condition is the result of the accumulated tolerances (stack-up) of the individual manufactured components.
- All components shall be manufactured to the dimensions and tolerances specified on their respective detail drawings.
- Critical interface or functional dimensions on the assembly are identified with a specific tolerance. These dimensions shall be achieved through component tolerancing, assembly processes, or adjustment.
- Mating parts to be free of interference, binding, or misalignment UOS.

DIMENSIONS

- All dimensions are in millimetres unless otherwise indicated.
- Critical inspection dimension: ⬭
- Dimensions with ** may require adjustment during tool trials.
- First article inspection number: ◯ (supplier to provide a report detailing accuracy to each of these dimensions).

- Other dimensions for reference.

GENERAL NOTES

- This drawing to be read in conjunction with all detail drawings and specifications referenced in the Bill of Materials (BOM).
- Fabricate or procure all components as per the BOM.
- Assembly shall be kept clean and free of all dirt, debris, metal chips, and foreign contaminants throughout the build process.
- Refer to individual component drawings for all finishing requirements.
- Remove all burrs and break all sharp edges on components prior to assembly.
- Final assembly shall be free of loose hardware, debris, and foreign objects.
- Final assembly to be free of scratches, tool marks, stains, and other cosmetic defects.
- Workmanship should be consistent with best industry practices.

ASSEMBLY NOTES

- Tighten all threaded fasteners to standard torque values for their size and grade, UOS.
- All moving parts shall operate smoothly and freely through their entire range of motion, without binding.
- All components shall assemble without use of excessive force.

SURFACE TEXTURE KEY

Refer to individual part drawings

--	--	--
--	--	--
--	--	--

#	DESCRIPTION	DATE
--	--	--
--	--	--
--	--	--
--	--	--
--	--	--
--	--	--
--	--	--
--	--	--
--	--	--
--	--	--
--	--	--
02	Updated to match sub-part	17/03/2026
01	Initial Release	19/09/2025

DESIGN INTENT

UOS fabricate per individual part drawings. The 3D model represents the final formed condition for reference.

© COPYRIGHT

This drawing is supplied in confidence. Do not disclose to any third party without prior written consent from Manufacturing Skills Queensland

MANUFACTURING SKILLS QUEENSLAND

monochrome
www.monochrome-design.com

PROJECT NAME	Headphone Stand	COLOUR: Refer to Part Drawings	PART NAME: MONO_038-a310
DRAWING TYPE	Part Drawing	FINISH: Refer to Part Drawings	
DATE CREATED	Friday, 19 September 2025	MATERIAL: Refer to Part Drawings	DESCRIPTION: Base + Diffuser Assembly

NOTES:

A3

SHEET 1 OF 1

DO NOT SCALE DRAWING

SCALE:1:3

ITEM NO.	PART NUMBER	DESCRIPTION	QTY.
1	MONO_038-P315	BASE ENCLOSURE	1
2	MONO_038-P316	CLAMP	1
3	LED STRIP 1	LED STRIP	1
4	M4 ZINC PAN POZI (PZ2) HI-PLAS PLASTITE SCREW	M4 X 6mm PAN POZI PLASTITE SCREW	2

ASSEMBLY PROCESS:

1. LOCATE THE JUNCTION OF THE FLAT LED STRIP AND CORD. MEASURE OUT AN LED STRIP LENGTH OF 700mm FROM THAT POINT. LOCATE THE NEAREST TRIM LINE AND DOCK THE LED STRIP TO LENGTH.
2. REMOVE 100mm OF THE PROTECTIVE BACKING FROM THE CUT END OF THE LED STRIP.
3. PLACE THE CUT END AT THE LED STRIP AT POINT 'A', AND ADHERE THE STRIP DOWN INTO THE TRACK.
4. GRADUALLY FIT THE LED STRIP ALONG THE CABLE PATH, ENSURING THAT THE ILLUMINATED SIDE OF THE STRIP FACES OUTWARD WHEN PLACED IN THE TRACK THAT RUNS AROUND THE PERIMETER.
5. WHEN POINT 'B' IS REACHED, THE STRIP SHOULD BE TURNED FLAT AGAIN. PLACE THE CLAMP OVER THE CABLE, JUST BEHIND THE START OF THE FLAT PORTION OF THE LED STRIP SO THAT THE CABLE IS CAPTURED IN THE MOUSEHOLE SHAPE. FEED THE CABLE UP AND OUT OF THE INVERTED MOUSEHOLE IN THE LIP OF THE LOWER ENCLOSURE.
6. SECURE THE CLAMP USING SELF-TAPPING SCREWS. TEST THAT THE CABLE IS CAPTURED BY GENTLY PULLING ON THE CABLE WHILE HOLDING THE ENCLOSURE.

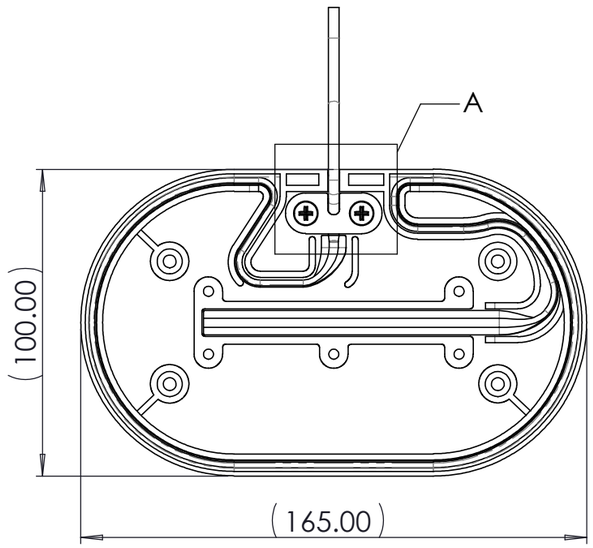

TOP VIEW

FRONT VIEW

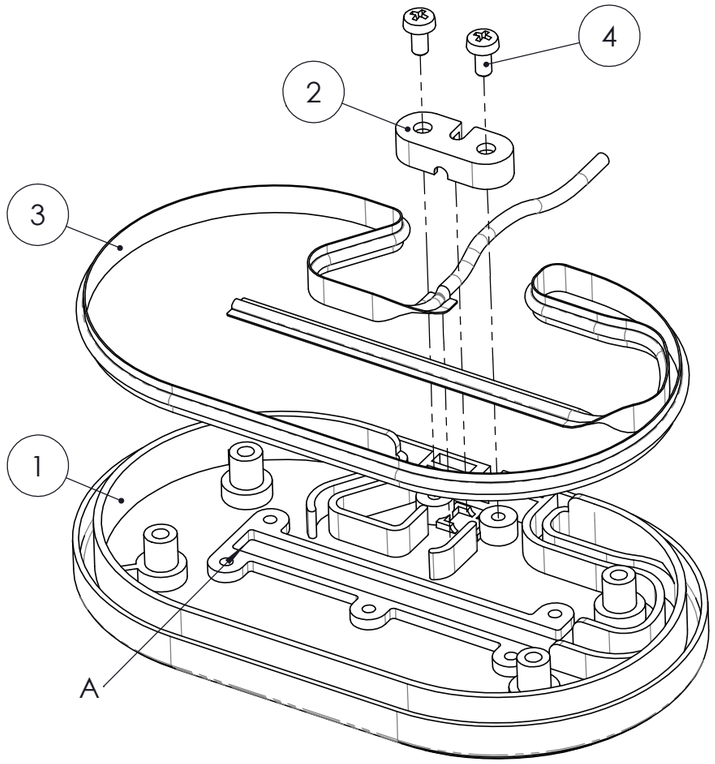

EXPLODED VIEW 1

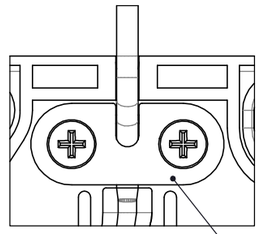

DETAIL A
SCALE 1 : 1

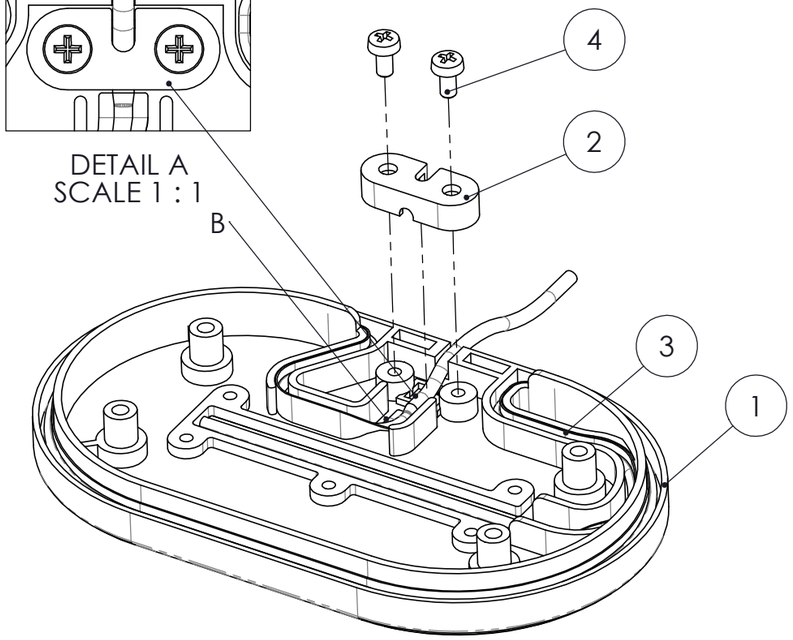

EXPLODED VIEW 2

TOLERANCES

- Unless otherwise specified (UOS), all dimensions on this assembly drawing are for reference only. The final assembly condition is the result of the accumulated tolerances (stack-up) of the individual manufactured components.
- All components shall be manufactured to the dimensions and tolerances specified on their respective detail drawings.
- Critical interface or functional dimensions on the assembly are identified with a specific tolerance. These dimensions shall be achieved through component tolerancing, assembly processes, or adjustment.
- Mating parts to be free of interference, binding, or misalignment UOS.

DIMENSIONS

- All dimensions are in millimetres unless otherwise indicated.
- Critical inspection dimension:
- Dimensions with ** may require adjustment during tool trials.
- First article inspection number: (supplier to provide a report detailing accuracy to each of these dimensions).
- Other dimensions for reference.

GENERAL NOTES

- This drawing to be read in conjunction with all detail drawings and specifications referenced in the Bill of Materials (BOM).
- Fabricate or procure all components as per the BOM.
- Assembly shall be kept clean and free of all dirt, debris, metal chips, and foreign contaminants throughout the build process.
- Refer to individual component drawings for all finishing requirements.
- Remove all burrs and break all sharp edges on components prior to assembly.
- Final assembly shall be free of loose hardware, debris, and foreign objects.
- Final assembly to be free of scratches, tool marks, stains, and other cosmetic defects.
- Workmanship should be consistent with best industry practices.

ASSEMBLY NOTES

- Tighten all threaded fasteners to standard torque values for their size and grade, UOS.
- All moving parts shall operate smoothly and freely through their entire range of motion, without binding.
- All components shall assemble without use of excessive force.

SURFACE TEXTURE KEY

Refer to individual part drawings

--	--	--
--	--	--
--	--	--

#	DESCRIPTION	DATE
--	--	--
--	--	--
--	--	--
--	--	--
--	--	--
--	--	--
--	--	--
--	--	--
--	--	--
--	--	--
--	--	--
02	Updated to match sub-part	17/03/2026
01	Initial Release	19/09/2025

DESIGN INTENT

UOS fabricate per individual part drawings. The 3D model represents the final formed condition for reference.

© COPYRIGHT

This drawing is supplied in confidence. Do not disclose to any third party without prior written consent from Manufacturing Skills Queensland

MANUFACTURING SKILLS QUEENSLAND

monochrome
www.monochrome-design.com

PROJECT NAME	Headphone Stand	COLOUR: Refer to Part Drawings	PART NAME: MONO_038-a311
DRAWING TYPE	Part Drawing	FINISH: Refer to Part Drawings	
DATE CREATED	Friday, 19 September 2025	MATERIAL: Refer to Part Drawings	DESCRIPTION: Base Assembly

NOTES:
- Spray Paint or powdercoat, per available equipment, training and services.
- Mask all threads when painting/ powdercoating.
- Colour may be customised to suit student's preference.

A3

SHEET 1 OF 1

DO NOT SCALE DRAWING

SCALE:1:2

ITEM NO.	PART NUMBER	DESCRIPTION	QTY.
1	MONO_038-P322	DIFFUSER ATTACHMENT	1
2	MONO_038-P321	DIFFUSER	1
3	NUT	M4 NUT	2
4	M4 BUT HEAD SCREW	M4 X 0.70P X 20mm BUTTON HEAD SOCKET SCREW	2

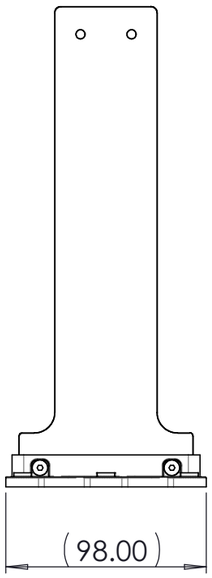

FRONT VIEW

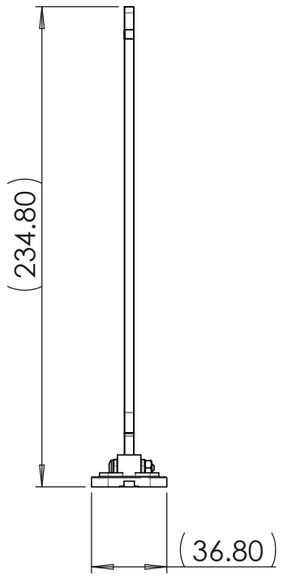

RIGHT VIEW

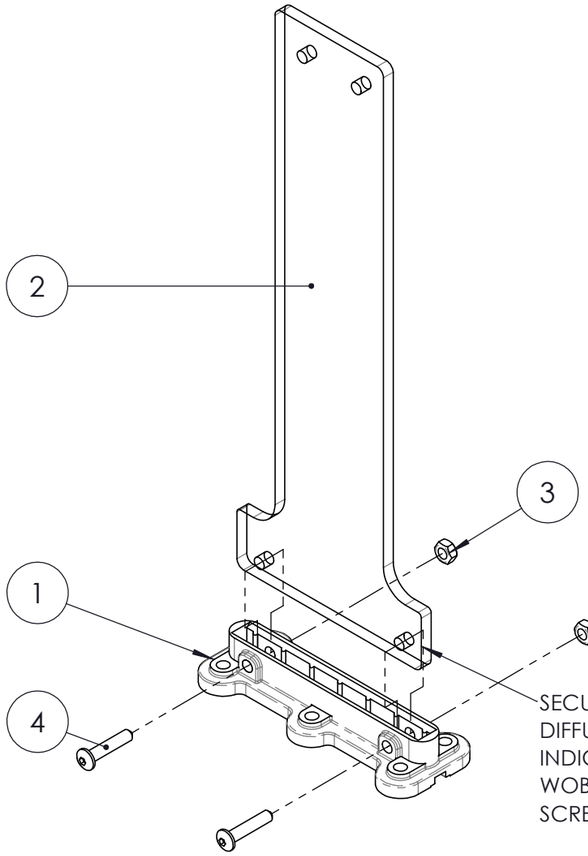

SECURE ACRYLIC DIFFUSER INTO DIFFUSER ATTACHMENT USING INDICATED FASTENERS. TO AVOID WOBBLE IN THE ACRYLIC STAND, ENSURE SCREWS ARE SECURELY TIGHTENED.

EXPLODED VIEW

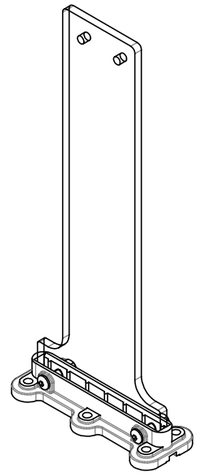

PERSPECTIVE VIEW 1

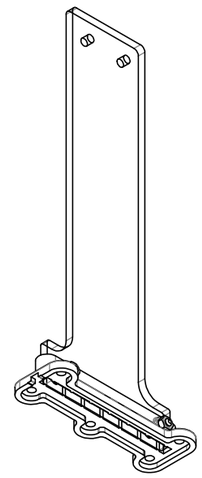

PERSPECTIVE VIEW 2

TOLERANCES

- Unless otherwise specified (UOS), all dimensions on this assembly drawing are for reference only. The final assembly condition is the result of the accumulated tolerances (stack-up) of the individual manufactured components.
- All components shall be manufactured to the dimensions and tolerances specified on their respective detail drawings.
- Critical interface or functional dimensions on the assembly are identified with a specific tolerance. These dimensions shall be achieved through component tolerancing, assembly processes, or adjustment.
- Mating parts to be free of interference, binding, or misalignment UOS.

DIMENSIONS

- All dimensions are in millimetres unless otherwise indicated.
- Critical inspection dimension: ⬭
- Dimensions with ** may require adjustment during tool trials.
- First article inspection number: ◯ (supplier to provide a report detailing accuracy to each of these dimensions).
- Other dimensions for reference.

GENERAL NOTES

- This drawing to be read in conjunction with all detail drawings and specifications referenced in the Bill of Materials (BOM).
- Fabricate or procure all components as per the BOM.
- Assembly shall be kept clean and free of all dirt, debris, metal chips, and foreign contaminants throughout the build process.
- Refer to individual component drawings for all finishing requirements.
- Remove all burrs and break all sharp edges on components prior to assembly.
- Final assembly shall be free of loose hardware, debris, and foreign objects.
- Final assembly to be free of scratches, tool marks, stains, and other cosmetic defects.
- Workmanship should be consistent with best industry practices.

ASSEMBLY NOTES

- Tighten all threaded fasteners to standard torque values for their size and grade, UOS.
- All moving parts shall operate smoothly and freely through their entire range of motion, without binding.
- All components shall assemble without use of excessive force.

SURFACE TEXTURE KEY

Refer to individual part drawings

--	--	--
--	--	--
--	--	--

#	DESCRIPTION	DATE
--	--	--
--	--	--
--	--	--
--	--	--
--	--	--
--	--	--
--	--	--
--	--	--
--	--	--
--	--	--
--	--	--
--	--	--
--	--	--
01	Initial Release	19/09/2025

DESIGN INTENT

UOS fabricate per individual part drawings. The 3D model represents the final formed condition for reference.

© COPYRIGHT

This drawing is supplied in confidence. Do not disclose to any third party without prior written consent from Manufacturing Skills Queensland

MANUFACTURING SKILLS QUEENSLAND

monochrome
www.monochrome-design.com

PROJECT NAME	Headphone Stand	COLOUR: Refer to Part Drawings	PART NAME: MONO_038-a320
DRAWING TYPE	Part Drawing	FINISH: Refer to Part Drawings	
DATE CREATED	Friday, 19 September 2025	MATERIAL: Refer to Part Drawings	DESCRIPTION: Diffuser Assembly
NOTES:			A3
			SHEET 1 OF 1
			DO NOT SCALE DRAWING
			SCALE:1:3

Tag	Direction	Angle	Inner Radius
A	UP	90°	0.5
B	DOWN	90°	0.5

NOMINAL K FACTOR: 0.44

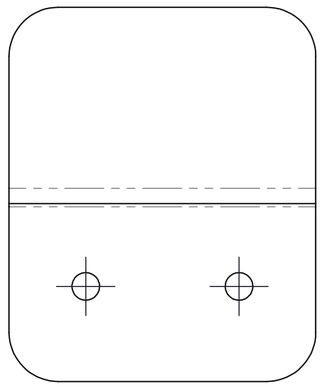

FRONT VIEW

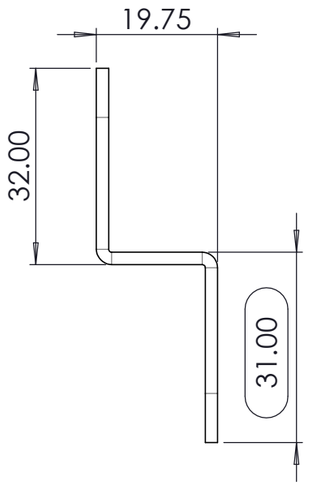

RIGHT VIEW

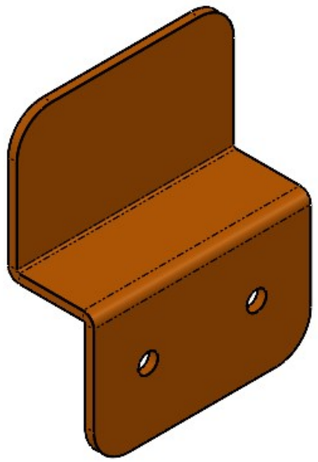

TEXTURE VIEW

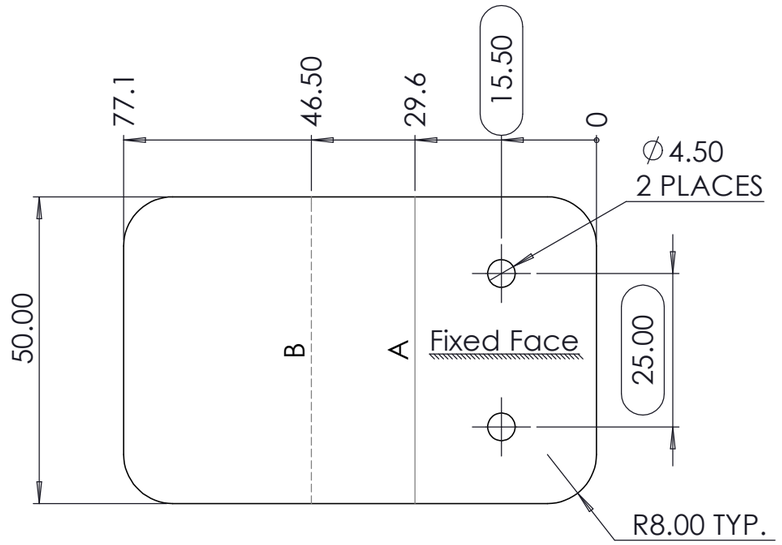

FLAT PATTERN

TOLERANCES

- Tolerances to ISO 2768-mK unless otherwise stated.
- For dimensions under 0.5mm tolerance is ±0.05.
- ISO 2768-1: Per below table (class indicated by check mark).
- ISO 2768-2: K (medium)

LINEAR - PERMISSIBLE DEV. IN MM FOR RANGES IN NOMINAL LENGTHS

	CLASS	0.5 - 6mm	6 - 30mm	30 - 120mm	120 - 400mm	Over 400mm
	FINE	±0.05mm	±0.1mm	±0.15mm	±0.2mm	±0.3mm
☑	MEDIUM	±0.1mm	±0.1mm	±0.3mm	±0.5mm	±0.8mm
	COARSE	±0.3mm	±0.5mm	±0.8mm	±1.2mm	±2.0mm

ANGULAR - PERMISSIBLE DEV. IN DEGREES & MINUTES FOR RANGES IN NOMINAL LENGTHS

	CLASS	0 - 10mm	10 - 50mm	50 - 120mm	120 - 400mm	Over 400mm
	FINE	±1°	±0°30'	±0°20'	±0°10'	±0°5'
☑	MEDIUM	±1°	±0°30'	±0°20'	±0°10'	±0°5'
	COARSE	±1° 30'	±1°	±0°30'	±0°15'	±0°10'

DIMENSIONS

- All dimensions are in millimetres unless otherwise indicated.
- Critical inspection dimension: ⬭
- Dimensions with ** may require adjustment during tool trials.
- First article inspection number: ◯ (supplier to provide a report detailing accuracy to each of these dimensions).
- Other dimensions for reference.

SURFACE TEXTURE KEY (RA STANDARD)

Refer to 3D part and surface finish sheet for application

Orange	Deburr	RA 3.2
Green	Smooth	RA 1.6
Blue	Polish	RA 0.9

PART SUPPLY

- Break all sharp edges R0.2 max.
- Cosmetic surfaces to be free of scratches, tool marks, and gouges.
- Part to be clean and free of oil, grease, and other foreign contaminants.
- Remove dross and tabs from cut edges
- Minimise handling marks on all external surfaces.
- Minimise tooling/die marks on external bends.
- No visible cracking/crazing permitted on bends.

PAINTING:

- Mask all areas indicated. No paint permitted on masked surfaces.
- Finish to be uniform in color, gloss, and texture across all visible surfaces. Painted surfaces shall be free of runs, sags, orange peel, fisheyes, cratering, blisters, and embedded foreign particles (dust, fibres).

INSTALLED HARDWARE (PEMs, standoffs, studs):

- Inserted hardware to be seated flush to 0.2mm proud.
- Installed hardware must be perpendicular to the surface within 1°.

#	DESCRIPTION	DATE
--	--	--
--	--	--
--	--	--
--	--	--
--	--	--
--	--	--
--	--	--
--	--	--
--	--	--
--	--	--
--	--	--
--	--	--
01	Initial Release	19/09/2025

DESIGN INTENT

Unless otherwise specified, fabricate per this drawing. The 3D model represents the final formed condition for reference.

© COPYRIGHT

This drawing is supplied in confidence. Do not disclose to any third party without prior written consent from Manufacturing Skills Queensland

MANUFACTURING SKILLS QUEENSLAND

monochrome
www.monochrome-design.com

PROJECT NAME	Headphone Stand	COLOUR: White	PART NAME: MONO_038-p301
DRAWING TYPE	Part Drawing	FINISH: Matte	
DATE CREATED	Friday, 19 September 2025	MATERIAL: 2mm Zincanneal Sheet	DESCRIPTION: Headphone Rest Front

A3

SHEET 1 OF 1

NOTES:

- FINAL FORMED DIMENSIONS GOVERN. MANUFACTURER TO DEVELOP FLAT PATTERN TO COMPENSATE FOR THEIR SPECIFIC TOOLING AND PROCESS.
- SPRAY PAINT OR POWDERCOAT, PER AVAILABLE EQUIPMENT, TRAINING AND SERVICES.
- MASK ALL THREADS WHEN PAINTING/ POWDERCOATING.
- COLOUR MAY BE CUSTOMISED TO SUIT STUDENT's PREFERENCE.

DO NOT SCALE DRAWING

SCALE:1:1

Tag	Direction	Angle	Inner Radius
A	DOWN	90°	0.5
B	UP	90°	0.5

NOMINAL K FACTOR: 0.44

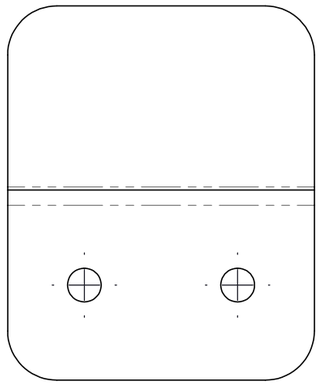

FRONT VIEW

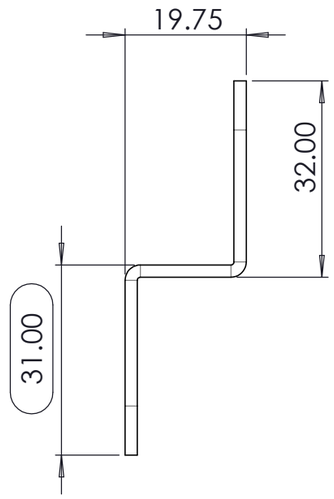

RIGHT VIEW

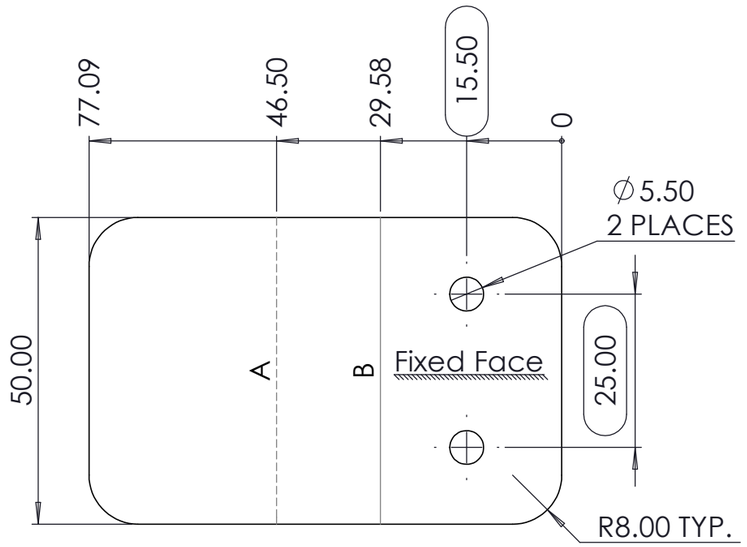

FLAT PATTERN

TOLERANCES

- Tolerances to ISO 2768-mK unless otherwise stated.
- For dimensions under 0.5mm tolerance is ±0.05.
- ISO 2768-1: Per below table (class indicated by check mark).
- ISO 2768-2: K (medium)

LINEAR - PERMISSIBLE DEV. IN MM FOR RANGES IN NOMINAL LENGTHS

	CLASS	0.5 - 6mm	6 - 30mm	30 - 120mm	120 - 400mm	Over 400mm
	FINE	±0.05mm	±0.1mm	±0.15mm	±0.2mm	±0.3mm
☑	MEDIUM	±0.1mm	±0.1mm	±0.3mm	±0.5mm	±0.8mm
	COARSE	±0.3mm	±0.5mm	±0.8mm	±1.2mm	±2.0mm

ANGULAR - PERMISSIBLE DEV. IN DEGREES & MINUTES FOR RANGES IN NOMINAL LENGTHS

	CLASS	0 - 10mm	10 - 50mm	50 - 120mm	120 - 400mm	Over 400mm
	FINE	±1°	±0°30'	±0°20'	±0°10'	±0°5'
☑	MEDIUM	±1°	±0°30'	±0°20'	±0°10'	±0°5'
	COARSE	±1° 30'	±1°	±0°30'	±0°15'	±0°10'

DIMENSIONS

- All dimensions are in millimetres unless otherwise indicated.
- Critical inspection dimension: ⬭
- Dimensions with ** may require adjustment during tool trials.
- First article inspection number: ◯ (supplier to provide a report detailing accuracy to each of these dimensions).
- Other dimensions for reference.

SURFACE TEXTURE KEY (RA STANDARD)

Refer to 3D part and surface finish sheet for application

Orange	Deburr	RA 3.2
Green	Smooth	RA 1.6
Blue	Polish	RA 0.9

PART SUPPLY

- Break all sharp edges R0.2 max.
- Cosmetic surfaces to be free of scratches, tool marks, and gouges.
- Part to be clean and free of oil, grease, and other foreign contaminants.
- Remove dross and tabs from cut edges
- Minimise handling marks on all external surfaces.
- Minimise tooling/die marks on external bends.
- No visible cracking/crazing permitted on bends.

PAINTING:

- Mask all areas indicated. No paint permitted on masked surfaces.
- Finish to be uniform in color, gloss, and texture across all visible surfaces. Painted surfaces shall be free of runs, sags, orange peel, fisheyes, cratering, blisters, and embedded foreign particles (dust, fibres).

INSTALLED HARDWARE (PEMs, standoffs, studs):

- Inserted hardware to be seated flush to 0.2mm proud.
- Installed hardware must be perpendicular to the surface within 1°.

#	DESCRIPTION	DATE
--	--	--
--	--	--
--	--	--
--	--	--
--	--	--
--	--	--
--	--	--
--	--	--
--	--	--
--	--	--
--	--	--
--	--	--
01	Initial Release	19/09/2025

DESIGN INTENT

Unless otherwise specified, fabricate per this drawing. The 3D model represents the final formed condition for reference.

© COPYRIGHT

This drawing is supplied in confidence. Do not disclose to any third party without prior written consent from Manufacturing Skills Queensland

MANUFACTURING SKILLS QUEENSLAND

monochrome
www.monochrome-design.com

PROJECT NAME	Headphone Stand	COLOUR: White	PART NAME: MONO_038-p303
DRAWING TYPE	Part Drawing	FINISH: Matte	
DATE CREATED	Friday, 19 September 2025	MATERIAL: 2mm Zincanneal Sheet	DESCRIPTION: Headphone Rest Back

A3

SHEET 1 OF 1

NOTES:

- FINAL FORMED DIMENSIONS GOVERN. MANUFACTURER TO DEVELOP FLAT PATTERN TO COMPENSATE FOR THEIR SPECIFIC TOOLING AND PROCESS.

DO NOT SCALE DRAWING

SCALE:1:1

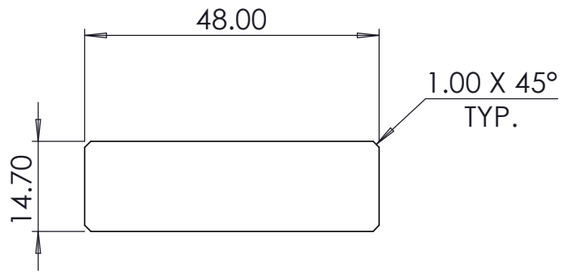

TOP VIEW

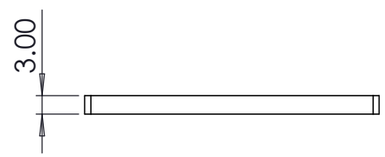

FRONT VIEW

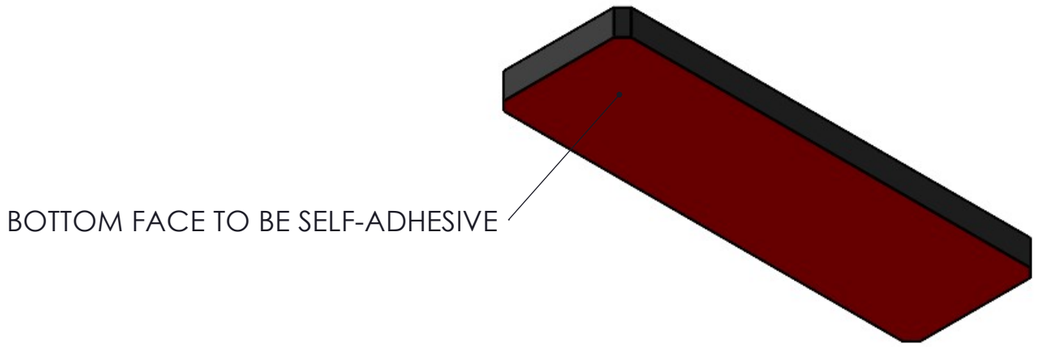

PERSPECTIVE VIEW 1

TOLERANCES

- Tolerances to ISO 2768-mK unless otherwise stated.
- For dimensions under 0.5mm tolerance is ±0.05.
- ISO 2768-1: Per below table (class indicated by check mark).
- ISO 2768-2: K (medium)

LINEAR - PERMISSIBLE DEV. IN MM FOR RANGES IN NOMINAL LENGTHS

	CLASS	0.5 - 6mm	6 - 30mm	30 - 120mm	120 - 400mm	Over 400mm
	FINE	±0.05mm	±0.1mm	±0.15mm	±0.2mm	±0.3mm
☑	MEDIUM	±0.1mm	±0.1mm	±0.3mm	±0.5mm	±0.8mm
	COARSE	±0.3mm	±0.5mm	±0.8mm	±1.2mm	±2.0mm

ANGULAR - PERMISSIBLE DEV. IN DEGREES & MINUTES FOR RANGES IN NOMINAL LENGTHS

	CLASS	0 - 10mm	10 - 50mm	50 - 120mm	120 - 400mm	Over 400mm
	FINE	±1°	±0°30'	±0°20'	±0°10'	±0°5'
☑	MEDIUM	±1°	±0°30'	±0°20'	±0°10'	±0°5'
	COARSE	±1° 30'	±1°	±0°30'	±0°15'	±0°10'

DIMENSIONS

- All dimensions are in millimetres unless otherwise indicated.
- All dimensions to base of draft unless otherwise indicated.

- Critical inspection dimension: ⬭
- Dimensions with ** may require adjustment during tool trials.
- First article inspection number: ◯ (supplier to provide FAI report detailing each of these dimensions).

- Other dimensions for reference.

SURFACE TEXTURE KEY (SPI STANDARD)

Refer to 3D part surface colouring for application

Orange	Natural	Printed Finish
Green	Sanded	Sanding (from 220 to 400 Grit)
Blue	Smooth	Vapour Smoothing

PART SUPPLY

- Break all sharp edges R0.2 max.
- Cosmetic surfaces to be free of scratches, tool marks, and gouges.
- Part to be clean and free of oil, grease, and other foreign contaminants.
- Remove dross and tabs from cut edges
- Minimise handling marks on all external surfaces.
- Minimise tooling/die marks on external bends.
- No visible cracking/crazing permitted on bends.

PAINTING:

- Mask all areas indicated. No paint permitted on masked surfaces.
- Finish to be uniform in color, gloss, and texture across all visible surfaces. Painted surfaces shall be free of runs, sags, orange peel, fisheyes, cratering, blisters, and embedded foreign particles (dust, fibres).

INSTALLED HARDWARE (PEMs, standoffs, studs):

- Inserted hardware to be seated flush to 0.2mm proud.
- Installed hardware must be perpendicular to the surface within 1°.

#	DESCRIPTION	DATE
--	--	--
--	--	--
--	--	--
--	--	--
--	--	--
--	--	--
--	--	--
--	--	--
--	--	--
--	--	--
--	--	--
--	--	--
01	Initial Release	23/09/2025

DESIGN INTENT

Unless otherwise specified, fabricate per 3D model file. Drawing supplied for reference and inspection purposes only.

© COPYRIGHT

This drawing is supplied in confidence. Do not disclose to any third party without prior written consent from Manufacturing Skills Queensland

MANUFACTURING SKILLS QUEENSLAND

monochrome
www.monochrome-design.com

PROJECT NAME	Headphone Stand	COLOUR: Black	PART NAME: MONO_038-p304
DRAWING TYPE	Part Drawing	FINISH: Matte	
DATE CREATED	Tuesday, 23 September 2025	MATERIAL: Neoprene Rubber Sheet	DESCRIPTION: Rubber Rest
NOTES:			A3
			SHEET 1 OF 1
			DO NOT SCALE DRAWING
			SCALE:1:1

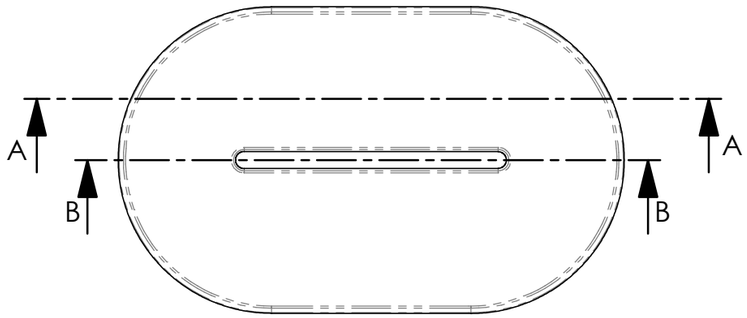

TOP VIEW

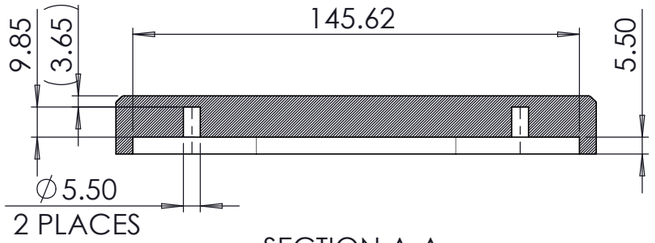

SECTION A-A

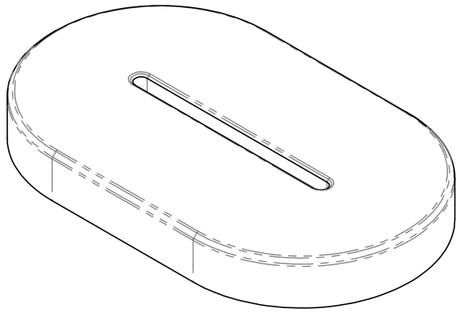

PERSPECTIVE VIEW 1

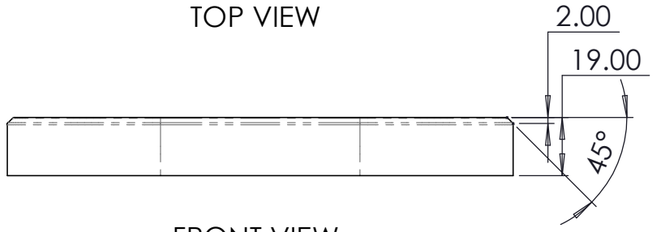

FRONT VIEW

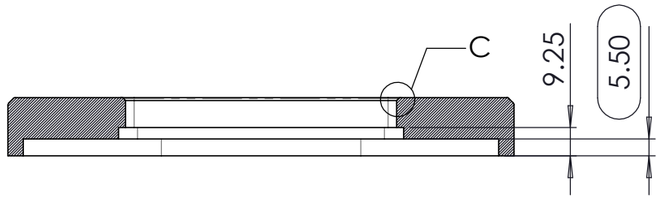

SECTION B-B

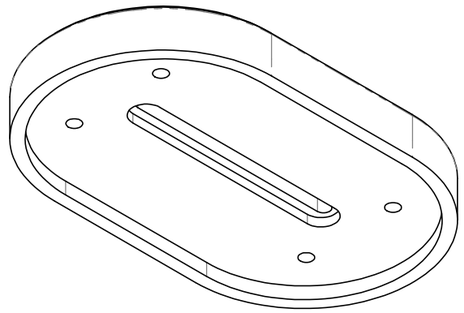

PERSPECTIVE VIEW 2

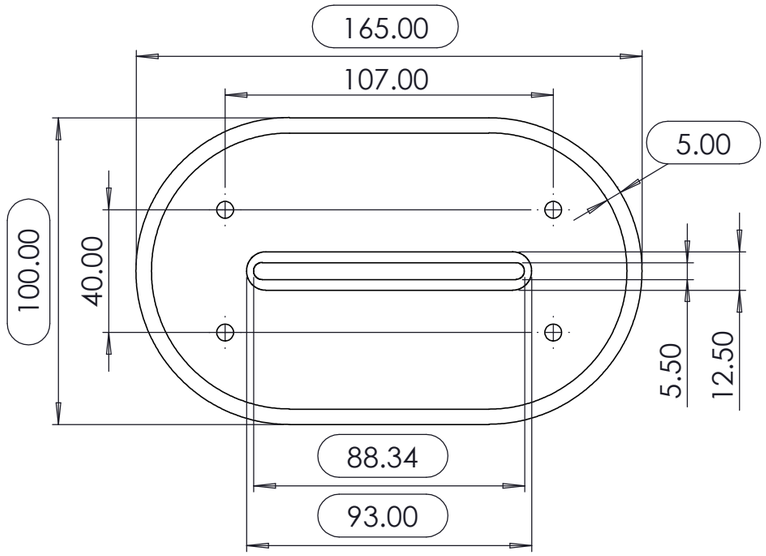

UNDERSIDE VIEW

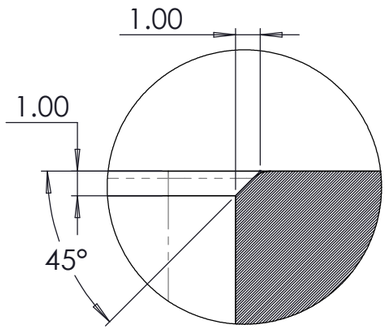

DETAIL C
SCALE 4 : 1

TOLERANCES

- Tolerances to ISO 2768-mK unless otherwise stated.
- For dimensions under 0.5mm tolerance is ±0.05.
- ISO 2768-1: Per below table (class indicated by check mark).
- ISO 2768-2: K (medium)

LINEAR - PERMISSIBLE DEV. IN MM FOR RANGES IN NOMINAL LENGTHS

	CLASS	0.5 - 6mm	6 - 30mm	30 - 120mm	120 - 400mm	Over 400mm
	FINE	±0.05mm	±0.1mm	±0.15mm	±0.2mm	±0.3mm
☑	MEDIUM	±0.1mm	±0.1mm	±0.3mm	±0.5mm	±0.8mm
	COARSE	±0.3mm	±0.5mm	±0.8mm	±1.2mm	±2.0mm

ANGULAR - PERMISSIBLE DEV. IN DEGREES & MINUTES FOR RANGES IN NOMINAL LENGTHS

	CLASS	0 - 10mm	10 - 50mm	50 - 120mm	120 - 400mm	Over 400mm
	FINE	±1°	±0°30'	±0°20'	±0°10'	±0°5'
☑	MEDIUM	±1°	±0°30'	±0°20'	±0°10'	±0°5'
	COARSE	±1° 30'	±1°	±0°30'	±0°15'	±0°10'

DIMENSIONS

- All dimensions are in millimetres unless otherwise indicated.
- Critical inspection dimension: ▭
- Dimensions with ** may require adjustment during tool trials.
- First article inspection number: ◯ (supplier to provide a report detailing accuracy to each of these dimensions).
- Other dimensions for reference.

SURFACE TEXTURE KEY (RA STANDARD)

Refer to 3D part and surface finish sheet for application

Orange	Smooth	120 Grit
Green	Fine	180 Grit
Blue	Very Fine	320 Grit

PART SUPPLY

- Unless otherwise specified (UOS).
- Quarter sawn timber to be used for all visible faces to ensure stability and grain pattern
- Grain direction as indicated by arrow symbol on drawing.
- Sand all surfaces to a minimum 240 grit UOS prior to finishing.
- Final surface to be free of mill marks, scratches, and glue residue.
- Remove all cross-grain scratches.
- Arris all sharp edges R1.0mm max UOS to prevent splintering.
- Visible surfaces to be free of unfilled knots, checks, splits, and sapwood.
- All joints to be tight-fitting, accurate, and free of gaps.

INSTALLED HARDWARE:

- Inserted hardware to be seated flush to 0.1mm recessed below surface.
- Installed hardware must be perpendicular to the surface within 1°.

#	DESCRIPTION	DATE
--	--	--
--	--	--
--	--	--
--	--	--
--	--	--
--	--	--
--	--	--
--	--	--
--	--	--
--	--	--
--	--	--
--	--	--
01	Initial Release	23/09/2025

DESIGN INTENT

Unless otherwise specified, fabricate per this drawing. The 3D model represents the final formed condition for reference.

© COPYRIGHT

This drawing is supplied in confidence. Do not disclose to any third party without prior written consent from Manufacturing Skills Queensland

MANUFACTURING SKILLS QUEENSLAND

monochrome
www.monochrome-design.com

PROJECT NAME	Headphone Stand	COLOUR: Natural	PART NAME: MONO_038-p308
DRAWING TYPE	Part Drawing	FINISH: Satin, Oiled or Stained	
DATE CREATED	Tuesday, 23 September 2025	MATERIAL: Timber	DESCRIPTION: Wooden Top
NOTES:			A3
			SHEET 1 OF 1
			DO NOT SCALE DRAWING
			SCALE:1:2

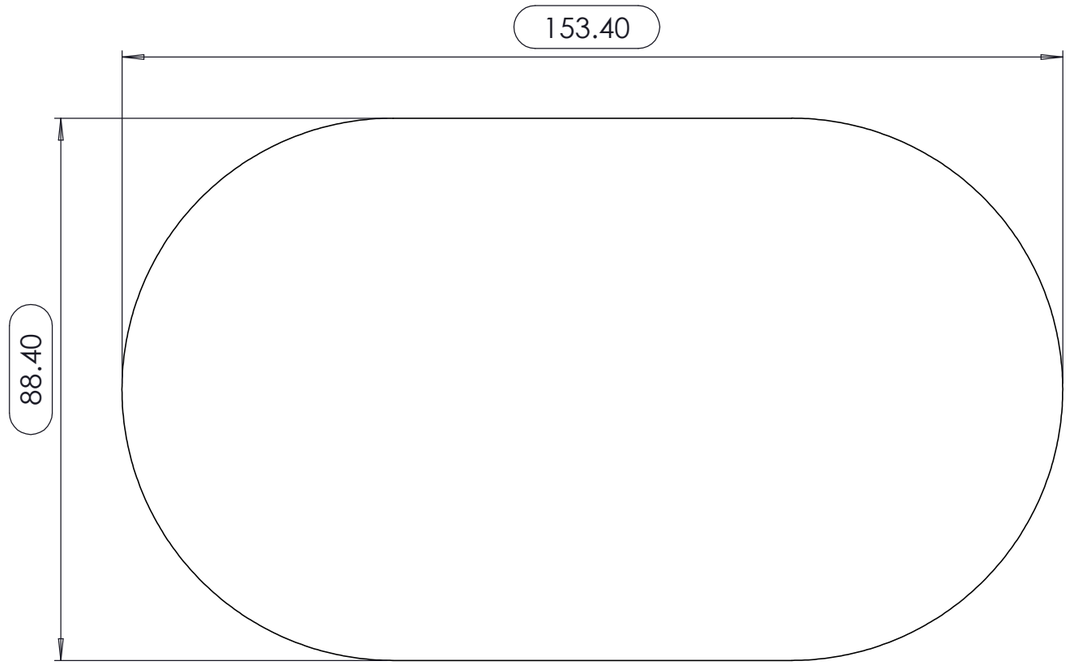

TOP VIEW

FRONT VIEW

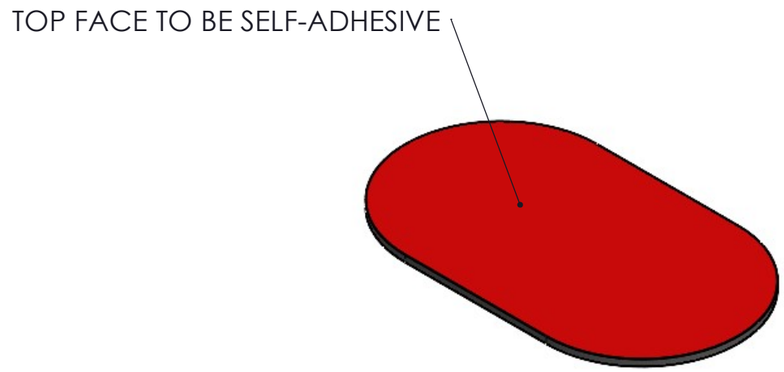

PERSPECTIVE VIEW 1

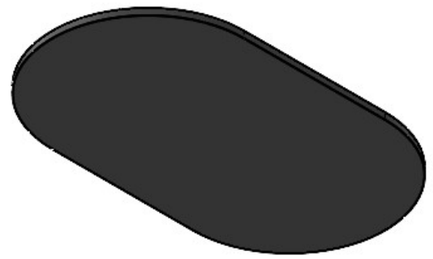

PERSPECTIVE VIEW 2

TOLERANCES

- Tolerances to ISO 2768-mK unless otherwise stated.
- For dimensions under 0.5mm tolerance is ±0.05.
- ISO 2768-1: Per below table (class indicated by check mark).
- ISO 2768-2: K (medium)

LINEAR - PERMISSIBLE DEV. IN MM FOR RANGES IN NOMINAL LENGTHS

	CLASS	0.5 - 6mm	6 - 30mm	30 - 120mm	120 - 400mm	Over 400mm
	FINE	±0.05mm	±0.1mm	±0.15mm	±0.2mm	±0.3mm
☑	MEDIUM	±0.1mm	±0.1mm	±0.3mm	±0.5mm	±0.8mm
	COARSE	±0.3mm	±0.5mm	±0.8mm	±1.2mm	±2.0mm

ANGULAR - PERMISSIBLE DEV. IN DEGREES & MINUTES FOR RANGES IN NOMINAL LENGTHS

	CLASS	0 - 10mm	10 - 50mm	50 - 120mm	120 - 400mm	Over 400mm
	FINE	±1°	±0°30'	±0°20'	±0°10'	±0°5'
☑	MEDIUM	±1°	±0°30'	±0°20'	±0°10'	±0°5'
	COARSE	±1° 30'	±1°	±0°30'	±0°15'	±0°10'

DIMENSIONS

- All dimensions are in millimetres unless otherwise indicated.
- All dimensions to base of draft unless otherwise indicated.

- Critical inspection dimension: ⬭
- Dimensions with ** may require adjustment during tool trials.
- First article inspection number: ◯ (supplier to provide FAI report detailing each of these dimensions).

- Other dimensions for reference.

SURFACE TEXTURE KEY (SPI STANDARD)

Refer to 3D part surface colouring for application

Orange	Natural	Printed Finish
Green	Sanded	Sanding (from 220 to 400 Grit)
Blue	Smooth	Vapour Smoothing

PART SUPPLY

- Break all sharp edges R0.2 max.
- Cosmetic surfaces to be free of scratches, tool marks, and gouges.
- Part to be clean and free of oil, grease, and other foreign contaminants.
- Remove dross and tabs from cut edges
- Minimise handling marks on all external surfaces.
- Minimise tooling/die marks on external bends.
- No visible cracking/crazing permitted on bends.

PAINTING:

- Mask all areas indicated. No paint permitted on masked surfaces.
- Finish to be uniform in color, gloss, and texture across all visible surfaces. Painted surfaces shall be free of runs, sags, orange peel, fisheyes, cratering, blisters, and embedded foreign particles (dust, fibres).

INSTALLED HARDWARE (PEMs, standoffs, studs):

- Inserted hardware to be seated flush to 0.2mm proud.
- Installed hardware must be perpendicular to the surface within 1°.

#	DESCRIPTION	DATE
--	--	--
--	--	--
--	--	--
--	--	--
--	--	--
--	--	--
--	--	--
--	--	--
--	--	--
--	--	--
--	--	--
--	--	--
01	Initial Release	23/09/2025

DESIGN INTENT

Unless otherwise specified, fabricate per 3D model file. Drawing supplied for reference and inspection purposes only.

© COPYRIGHT

This drawing is supplied in confidence. Do not disclose to any third party without prior written consent from Manufacturing Skills Queensland

MANUFACTURING SKILLS QUEENSLAND

monochrome
www.monochrome-design.com

PROJECT NAME	Headphone Stand	COLOUR: Black	PART NAME: MONO_038-p309
DRAWING TYPE	Part Drawing	FINISH: Matte	
DATE CREATED	Tuesday, 23 September 2025	MATERIAL: Neoprene Rubber Sheet	DESCRIPTION: Rubber Base

NOTES:

A3

SHEET 1 OF 1

DO NOT SCALE DRAWING

SCALE:1:1

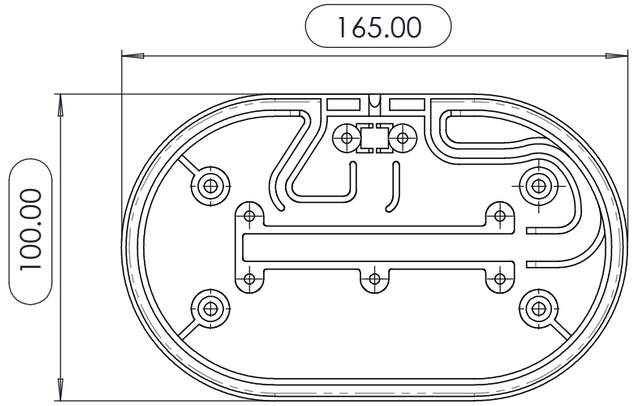

TOP VIEW

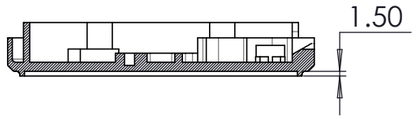

SECTION A-A

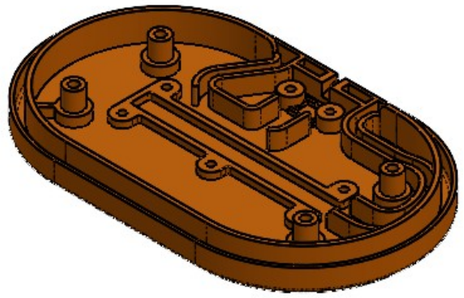

TEXTURE VIEW

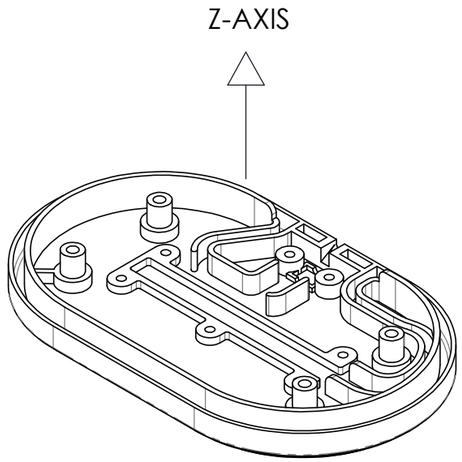

PERSPECTIVE VIEW 1

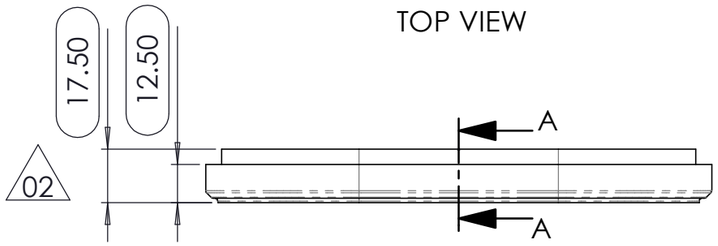

FRONT VIEW

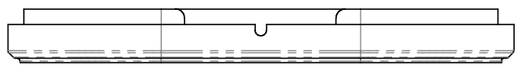

BACK VIEW

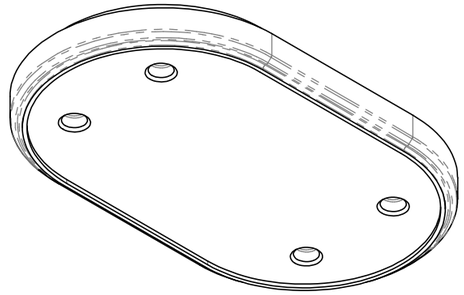

PERSPECTIVE VIEW 2

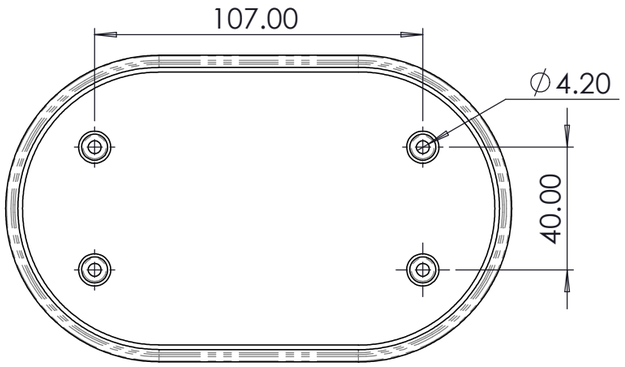

UNDERSIDE VIEW

NOTES:

- ENSURE REMOVAL OF ALL SUPPORT MATERIAL.
- CHECK DIMENSIONS MARKED WITH OBROUNDS.

TOLERANCES

- Tolerances to ISO 2768-mK unless otherwise stated.
- For dimensions under 0.5mm tolerance is ±0.05.
- ISO 2768-1: Per below table (class indicated by check mark).
- ISO 2768-2: K (medium)

LINEAR - PERMISSIBLE DEV. IN MM FOR RANGES IN NOMINAL LENGTHS

	CLASS	0.5 - 6mm	6 - 30mm	30 - 120mm	120 - 400mm	Over 400mm
	FINE	±0.05mm	±0.1mm	±0.15mm	±0.2mm	±0.3mm
✓	MEDIUM	±0.1mm	±0.1mm	±0.3mm	±0.5mm	±0.8mm
	COARSE	±0.3mm	±0.5mm	±0.8mm	±1.2mm	±2.0mm

ANGULAR - PERMISSIBLE DEV. IN DEGREES & MINUTES FOR RANGES IN NOMINAL LENGTHS

	CLASS	0 - 10mm	10 - 50mm	50 - 120mm	120 - 400mm	Over 400mm
	FINE	±1°	±0°30'	±0°20'	±0°10'	±0°5'
✓	MEDIUM	±1°	±0°30'	±0°20'	±0°10'	±0°5'
	COARSE	±1°30'	±1°	±0°30'	±0°15'	±0°10'

DIMENSIONS

- All dimensions are in millimetres unless otherwise indicated.
- All dimensions to base of draft unless otherwise indicated.

- Critical inspection dimension: ⬭
- Dimensions with ** may require adjustment during tool trials.
- First article inspection number: ◯ (supplier to provide FAI report detailing each of these dimensions).

- Other dimensions for reference.

SURFACE TEXTURE KEY (SPI STANDARD)

Refer to 3D part surface colouring for application

Orange	Natural	Printed Finish
Green	Sanded	Sanding (from 220 to 400 Grit)
Blue	Smooth	Vapour Smoothing

PART SUPPLY

- Printing technology: Fused Deposition Modelling (FDM).
- Alternatively, Selective Laser Sintering (SLS), Stereolithography (SLA) or Multi Jet Fusion (MJF) may be used where FDM is unavailable.
- Build Orientation: print part with Z-axis as indicated. This is critical for mechanical strength of the part.
- Face marked 'A' is a primary cosmetic surface.
- Orient part to minimise layer lines and support marks on this face.
- Part to be free of excessive stringing, warping, delamination, and major layer shifts.
- Remove all support structures. Marks/nibs from support material are permissible on non-critical/internal surfaces only.
- Layer lines and some "stair-stepping" on angled/curved surfaces are acceptable.
- Tap holes as specified. Do not print threads.
- Machine critical bores and faces to specified tolerances after printing.
- Align Z-seam on sharpest corner (or as indicated) to minimise visual impact.

#	DESCRIPTION	DATE
--	--	--
--	--	--
--	--	--
--	--	--
--	--	--
--	--	--
--	--	--
--	--	--
--	--	--
--	--	--
--	--	--
--	--	--
02	Rib height reduced	17/03/2026
01	Initial Release	19/09/2025

DESIGN INTENT

Unless otherwise specified, fabricate per 3D model file. Drawing supplied for reference and inspection purposes only.

© COPYRIGHT

This drawing is supplied in confidence. Do not disclose to any third party without prior written consent from Manufacturing Skills Queensland

MANUFACTURING SKILLS QUEENSLAND

monochrome
www.monochrome-design.com

PROJECT NAME	Headphone Stand	COLOUR: White	PART NAME: MONO_038-p315
DRAWING TYPE	Part Drawing	FINISH: Matte	
DATE CREATED	Tuesday, 23 September 2025	MATERIAL: PLA Filament	DESCRIPTION: Base Enclosure
NOTES:			A3
			SHEET 1 OF 1
			DO NOT SCALE DRAWING
			SCALE:1:2

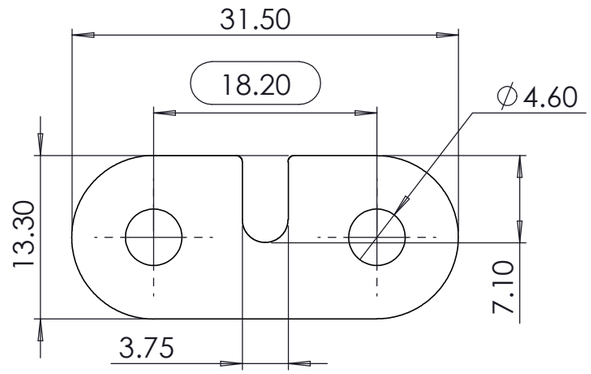

TOP VIEW

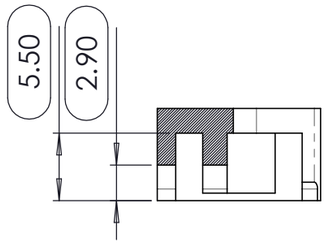

SECTION A-A

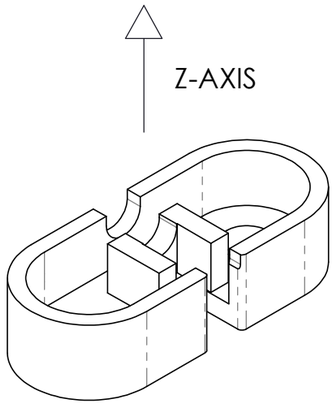

PRINT ORIENTATION

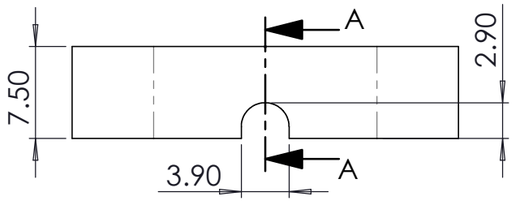

FRONT VIEW

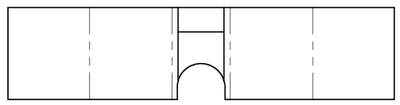

BACK VIEW

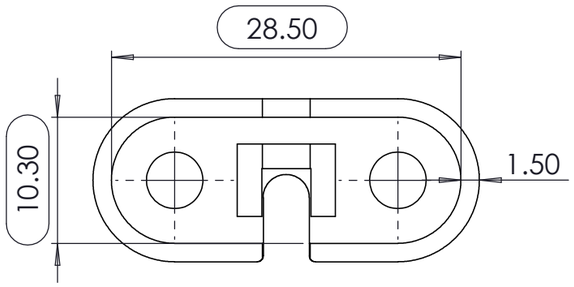

UNDERSIDE VIEW

NOTES:

- ENSURE REMOVAL OF ALL SUPPORT MATERIAL.
- CHECK DIMENSIONS MARKED WITH OBROUNDS.

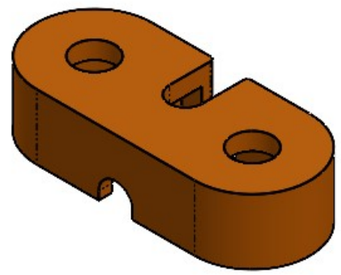

TEXTURE VIEW

TOLERANCES

- Tolerances to ISO 2768-mK unless otherwise stated.
- For dimensions under 0.5mm tolerance is ±0.05.
- ISO 2768-1: Per below table (class indicated by check mark).
- ISO 2768-2: K (medium)

LINEAR - PERMISSIBLE DEV. IN MM FOR RANGES IN NOMINAL LENGTHS

	CLASS	0.5 - 6mm	6 - 30mm	30 - 120mm	120 - 400mm	Over 400mm
	FINE	±0.05mm	±0.1mm	±0.15mm	±0.2mm	±0.3mm
☑	MEDIUM	±0.1mm	±0.1mm	±0.3mm	±0.5mm	±0.8mm
	COARSE	±0.3mm	±0.5mm	±0.8mm	±1.2mm	±2.0mm

ANGULAR - PERMISSIBLE DEV. IN DEGREES & MINUTES FOR RANGES IN NOMINAL LENGTHS

	CLASS	0 - 10mm	10 - 50mm	50 - 120mm	120 - 400mm	Over 400mm
	FINE	±1°	±0°30'	±0°20'	±0°10'	±0°5'
☑	MEDIUM	±1°	±0°30'	±0°20'	±0°10'	±0°5'
	COARSE	±1°30'	±1°	±0°30'	±0°15'	±0°10'

DIMENSIONS

- All dimensions are in millimetres unless otherwise indicated.
- All dimensions to base of draft unless otherwise indicated.

- Critical inspection dimension: ⬭
- Dimensions with ** may require adjustment during tool trials.
- First article inspection number: ◯ (supplier to provide FAI report detailing each of these dimensions).

- Other dimensions for reference.

SURFACE TEXTURE KEY (SPI STANDARD)

Refer to 3D part surface colouring for application

Orange	Natural	Printed Finish
Green	Sanded	Sanding (from 220 to 400 Grit)
Blue	Smooth	Vapour Smoothing

PART SUPPLY

- Printing technology: Fused Deposition Modelling (FDM).
- Alternatively, Selective Laser Sintering (SLS), Stereolithography (SLA) or Multi Jet Fusion (MJF) may be used where FDM is unavailable.
- Build Orientation: print part with Z-axis as indicated. This is critical for mechanical strength of the part.
- Face marked 'A' is a primary cosmetic surface.
- Orient part to minimise layer lines and support marks on this face.
- Part to be free of excessive stringing, warping, delamination, and major layer shifts.
- Remove all support structures. Marks/nibs from support material are permissible on non-critical/internal surfaces only.
- Layer lines and some "stair-stepping" on angled/curved surfaces are acceptable.
- Tap holes as specified. Do not print threads.
- Machine critical bores and faces to specified tolerances after printing.
- Align Z-seam on sharpest corner (or as indicated) to minimise visual impact.

#	DESCRIPTION	DATE
--	--	--
--	--	--
--	--	--
--	--	--
--	--	--
--	--	--
--	--	--
--	--	--
--	--	--
--	--	--
--	--	--
--	--	--
--	--	--
01	Initial Release	19/09/2025

DESIGN INTENT

Unless otherwise specified, fabricate per 3D model file. Drawing supplied for reference and inspection purposes only.

© COPYRIGHT

This drawing is supplied in confidence. Do not disclose to any third party without prior written consent from Manufacturing Skills Queensland

MANUFACTURING SKILLS QUEENSLAND

monochrome
www.monochrome-design.com

PROJECT NAME	Headphone Stand	COLOUR: White	PART NAME: MONO_038-p316
DRAWING TYPE	Part Drawing	FINISH: Matte	
DATE CREATED	Tuesday, 23 September 2025	MATERIAL: PLA Filament	DESCRIPTION: Clamp
NOTES:			A3
			SHEET 1 OF 1
			DO NOT SCALE DRAWING
			SCALE:2:1

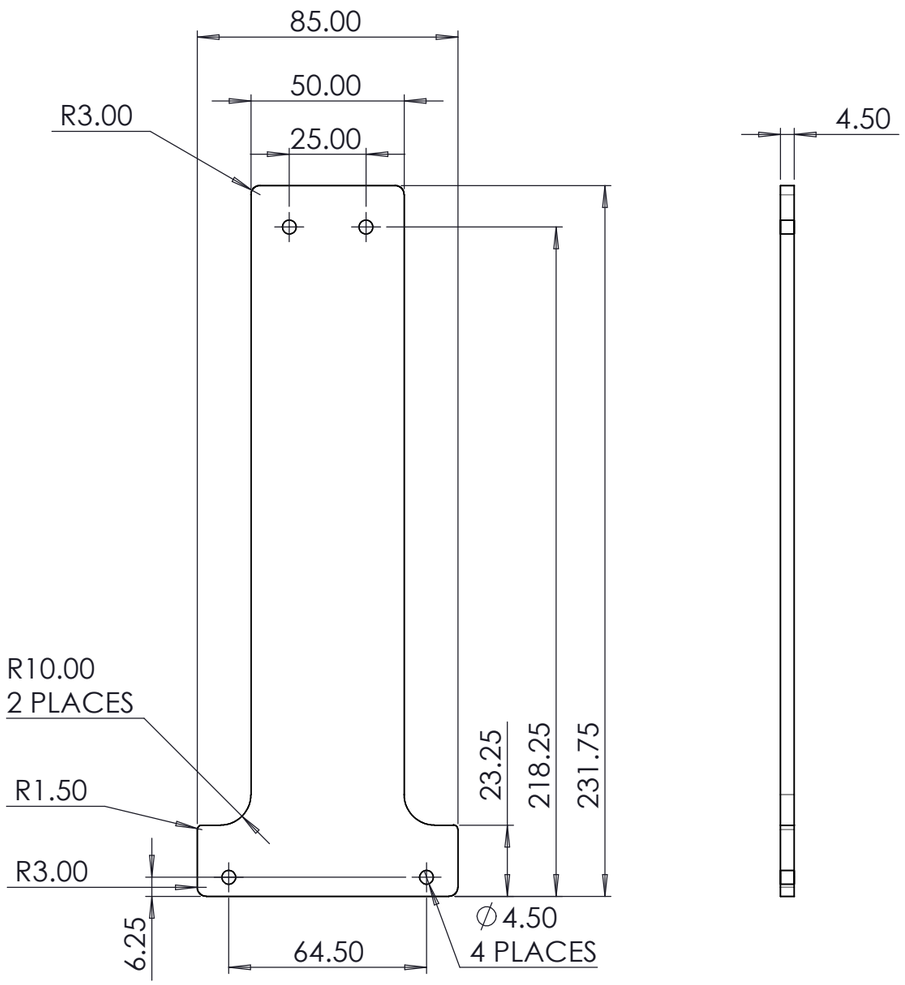

FRONT VIEW

RIGHT VIEW

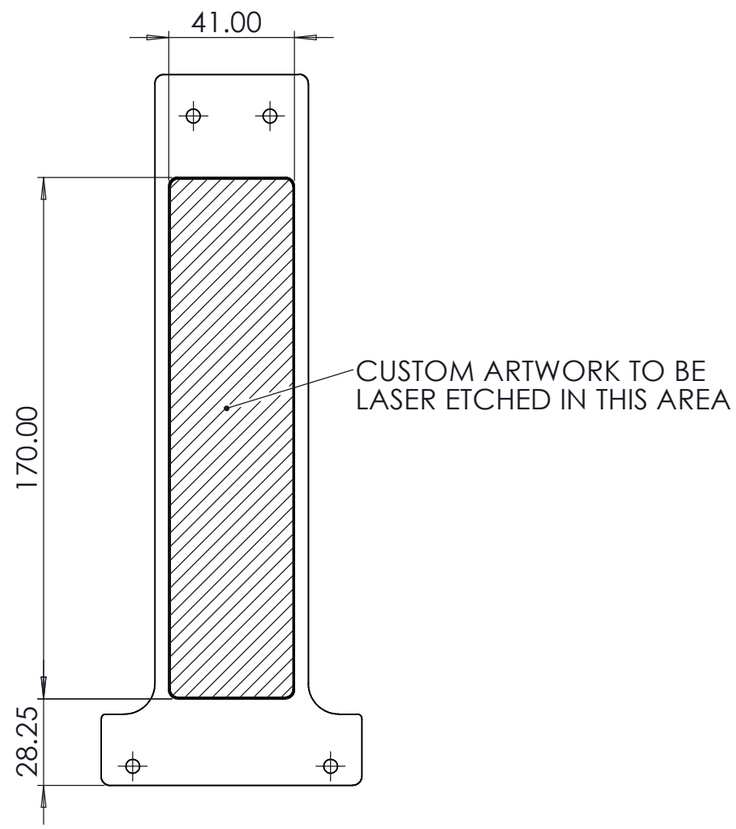

FRONT VIEW
ARWORK PLACEMENT

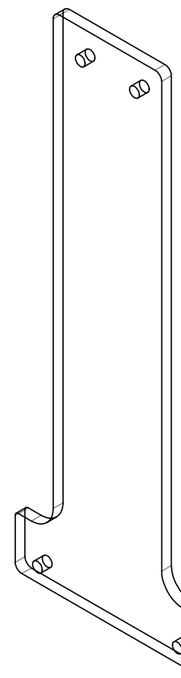

PERSPECTIVE VIEW 1

TOLERANCES

- Tolerances to ISO 2768-fH unless otherwise stated.
- For dimensions under 0.5mm tolerance is ±0.05.
- ISO 2768-1: Per below table (class indicated by check mark).
- ISO 2768-2: H (fine)

LINEAR - PERMISSIBLE DEV. IN MM FOR RANGES IN NOMINAL LENGTHS

	CLASS	0.5 - 6mm	6 - 30mm	30 - 120mm	120 - 400mm	Over 400mm
☑	FINE	±0.05mm	±0.1mm	±0.15mm	±0.2mm	±0.3mm
	MEDIUM	±0.1mm	±0.1mm	±0.3mm	±0.5mm	±0.8mm
	COARSE	±0.3mm	±0.5mm	±0.8mm	±1.2mm	±2.0mm

ANGULAR - PERMISSIBLE DEV. IN DEGREES & MINUTES FOR RANGES IN NOMINAL LENGTHS

	CLASS	0 - 10mm	10 - 50mm	50 - 120mm	120 - 400mm	Over 400mm
☑	FINE	±1°	±0°30'	±0°20'	±0°10'	±0°5'
	MEDIUM	±1°	±0°30'	±0°20'	±0°10'	±0°5'
	COARSE	±1°30'	±1°	±0°30'	±0°15'	±0°10'

DIMENSIONS

- All dimensions are in millimetres unless otherwise indicated.
- Critical inspection dimension: ⬭
- Dimensions with ** may require adjustment during tool trials.
- First article inspection number: ◯ (supplier to provide a report detailing accuracy to each of these dimensions).
- Other dimensions for reference.

SURFACE TEXTURE KEY (RA STANDARD)

Refer to 3D part and surface finish sheet for application

Orange	Deburr	RA 3.2
Green	Smooth	RA 1.6
Blue	Polish	RA 0.9

PART SUPPLY

- Unless otherwise specified (UOS).
- Break all sharp edges R0.2 max UOS.
- Cosmetic surfaces to be free of scratches, tool marks, and gouges.
- Part to be clean and free of burrs, oil, grease, and other foreign contaminants.
- Maximum internal corner radius 0.8mm UOS.
- All threads to be clean and free of burrs. Gauge before and after finishing.
- All dimensions apply *after* finishing/plating.
- Minimise handling marks on all external surfaces.

PAINTING (IF SPECIFIED):

- Mask all areas indicated. No paint permitted on masked surfaces.
- Finish to be uniform in color, gloss, and texture across all visible surfaces. Painted surfaces shall be free of runs, sags, orange peel, fisheyes, cratering, blisters, and embedded foreign particles (dust, fibres).

#	DESCRIPTION	DATE
--	--	--
--	--	--
--	--	--
--	--	--
--	--	--
--	--	--
--	--	--
--	--	--
--	--	--
--	--	--
--	--	--
--	--	--
01	Initial Release	19/09/2025

DESIGN INTENT

Unless otherwise specified, fabricate per this drawing. The 3D model represents the final formed condition for reference.

© COPYRIGHT

This drawing is supplied in confidence. Do not disclose to any third party without prior written consent from Manufacturing Skills Queensland

MANUFACTURING SKILLS QUEENSLAND

monochrome
www.monochrome-design.com

PROJECT NAME	Headphone Stand	COLOUR: Clear	PART NAME: MONO_038-p321
DRAWING TYPE	Part Drawing	FINISH: Gloss	
DATE CREATED	Tuesday, 23 September 2025	MATERIAL: 4.5mm Acrylic Sheet	DESCRIPTION: Diffuser

NOTES:
-

A3

SHEET 1 OF 1

DO NOT SCALE DRAWING

SCALE:1:2

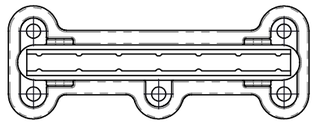

TOP VIEW

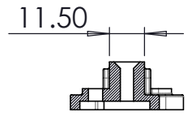

SECTION A-A

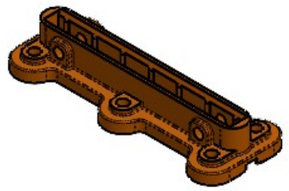

TEXTURE VIEW

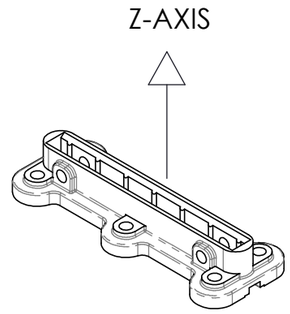

PERSPECTIVE VIEW 1

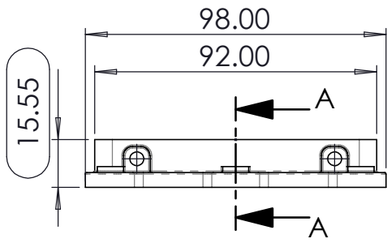

FRONT VIEW

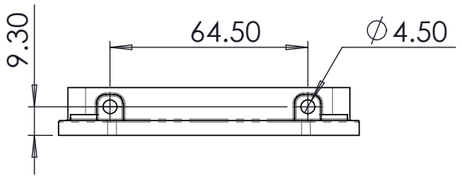

BACK VIEW

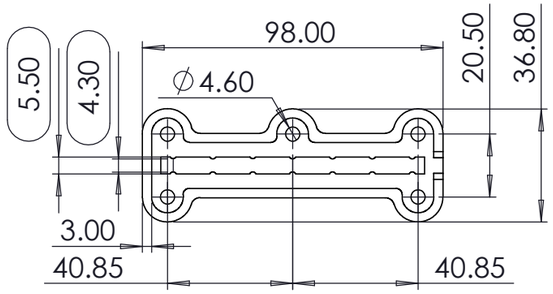

UNDERSIDE VIEW

NOTES:

- ENSURE REMOVAL OF ALL SUPPORT MATERIAL.
- CHECK DIMENSIONS MARKED WITH OBROUNDS.

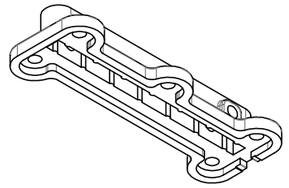

PERSPECTIVE VIEW 2

TOLERANCES

- Tolerances to ISO 2768-mK unless otherwise stated.
- For dimensions under 0.5mm tolerance is ±0.05.
- ISO 2768-1: Per below table (class indicated by check mark).
- ISO 2768-2: K (medium)

LINEAR - PERMISSIBLE DEV. IN MM FOR RANGES IN NOMINAL LENGTHS

	CLASS	0.5 - 6mm	6 - 30mm	30 - 120mm	120 - 400mm	Over 400mm
	FINE	±0.05mm	±0.1mm	±0.15mm	±0.2mm	±0.3mm
☑	MEDIUM	±0.1mm	±0.1mm	±0.3mm	±0.5mm	±0.8mm
	COARSE	±0.3mm	±0.5mm	±0.8mm	±1.2mm	±2.0mm

ANGULAR - PERMISSIBLE DEV. IN DEGREES & MINUTES FOR RANGES IN NOMINAL LENGTHS

	CLASS	0 - 10mm	10 - 50mm	50 - 120mm	120 - 400mm	Over 400mm
	FINE	±1°	±0°30'	±0°20'	±0°10'	±0°5'
☑	MEDIUM	±1°	±0°30'	±0°20'	±0°10'	±0°5'
	COARSE	±1°30'	±1°	±0°30'	±0°15'	±0°10'

DIMENSIONS

- All dimensions are in millimetres unless otherwise indicated.
- All dimensions to base of draft unless otherwise indicated.

- Critical inspection dimension: ⬭
- Dimensions with ** may require adjustment during tool trials.
- First article inspection number: ◯ (supplier to provide FAI report detailing each of these dimensions).

- Other dimensions for reference.

SURFACE TEXTURE KEY (SPI STANDARD)

Refer to 3D part surface colouring for application

Orange	Natural	Printed Finish
Green	Sanded	Sanding (from 220 to 400 Grit)
Blue	Smooth	Vapour Smoothing

PART SUPPLY

- Printing technology: Fused Deposition Modelling (FDM).
- Alternatively, Selective Laser Sintering (SLS), Stereolithography (SLA) or Multi Jet Fusion (MJF) may be used where FDM is unavailable.
- Build Orientation: print part with Z-axis as indicated. This is critical for mechanical strength of the part.
- Face marked 'A' is a primary cosmetic surface.
- Orient part to minimise layer lines and support marks on this face.
- Part to be free of excessive stringing, warping, delamination, and major layer shifts.
- Remove all support structures. Marks/nibs from support material are permissible on non-critical/internal surfaces only.
- Layer lines and some "stair-stepping" on angled/curved surfaces are acceptable.
- Tap holes as specified. Do not print threads.
- Machine critical bores and faces to specified tolerances after printing.
- Align Z-seam on sharpest corner (or as indicated) to minimise visual impact.

#	DESCRIPTION	DATE
--	--	--
--	--	--
--	--	--
--	--	--
--	--	--
--	--	--
--	--	--
--	--	--
--	--	--
--	--	--
--	--	--
--	--	--
--	--	--
--	--	--
01	Initial Release	19/09/2025

DESIGN INTENT

Unless otherwise specified, fabricate per 3D model file. Drawing supplied for reference and inspection purposes only.

© COPYRIGHT

This drawing is supplied in confidence. Do not disclose to any third party without prior written consent from Manufacturing Skills Queensland

MANUFACTURING SKILLS QUEENSLAND

monochrome
www.monochrome-design.com

PROJECT NAME	Headphone Stand	COLOUR: White	PART NAME: MONO_038-p322
DRAWING TYPE	Part Drawing	FINISH: Matte	
DATE CREATED	Tuesday, 23 September 2025	MATERIAL: PLA Filament	DESCRIPTION: Diffuser Attachment

NOTES:

A3

SHEET 1 OF 1

DO NOT SCALE DRAWING

SCALE:1:2